Valley County Planning and Zoning Department

700 S. Main ST | PO Box 1350
Cascade, ID 83611
www.co.valley.id.us
cherrick@valleycountyid.gov
208-382-7115

Subdivision Application

Includes Conditional Use Permit

TO BE COMPLETED BY THE PLANNING AND ZONING DEPARTMENT ☐ Check # _____ or ☐ Cash or ☒ Card

FILE # **SUB** 26-014 FEE $ 600.00

ACCEPTED BY _____ DEPOSIT --

CROSS REFERENCE FILE(S): _____ DATE 9-30-2026

☐ ADMINISTRATIVE PLAT # OF PROPOSED LOTS: _____

☐ SHORT PLAT COMMENTS: Condominium storage units

☐ FULL PLAT

When an application has been submitted, it will be reviewed in order to determine compliance with application requirements. A hearing date will be scheduled only after an application has been accepted as complete.

Applicant's Signature: _____ **Date:** 09/30/2026

By signing, you are agreeing to allow County staff to inspect the property identified in the application.

The following must be completed and submitted with the conditional use permit application:

- ☐ Neighborhood Meeting Information and results if 5 or more lots. VCC 9-5H-1.D
- ☒ A preliminary plat containing all of the necessary requirements according to the Valley County Subdivision Regulations, Title 10.
- ☒ A phasing plan and construction timeline.
- ☒ An 8½ x 11" – 300 scale drawing of the proposed subdivision showing only the street names and lots.
- ☒ A plot plan, drawn to scale, showing existing utilities, streets, easements, ditches, and buildings.
- ☒ A landscaping plan, drawn to scale, showing elements such as trees, shrubs, ground covers, and vines. Include a plant list, indicating the size, quantity, location, and name (both botanical and common) of all plant material to be used.
- ☒ A site grading plan clearly showing the existing site topography and detailing the best management practices for surface water management, siltation, sedimentation, and blowing of dirt and debris caused by grading, excavation, open cuts, side slopes, and other site preparation and development.
- ☒ A lighting plan.
- ☐ A Wildfire Mitigation Plan – Proposed administrative plats of less than 5 lots and proposed subdivisions with lands less than 20% "forested" (see definition in VCC 10-7) are exempt from the professional requirement and the short-form WUI plan may be submitted.
- ☐ Well logs of wells located in surrounding contiguous property and a current title search report of the property from a licenses title company
- ☒ Names and mailing addresses of property owners within 300 feet of the property boundary. Information can be obtained through the Valley County GIS maps. Only one list is required. Staff may notice more than 300 feet based on adjacent ownership and potential for impacts.
- ☒ **Three (3) copies of the application and additional materials are required.**

We recommend you review Title 9 and Title 10 of the Valley County Code online at www.co.valley.id.us/planning-zoning or at the Planning and Zoning Office

Subject to Idaho Statute 55-22 Underground Facilities Damage Prevention.

CONTACT INFORMATION

PROPOSED SUBDIVISION NAME: Alpine Storage Condominiums

APPLICANT Jeff Hatch - Hatch Design Architecture PHONE 208-475-3204
Owner ☐ Option Holder ☐ Contract Holder ☐

MAILING ADDRESS 200 W. 36th St., Garden City, Idaho ZIP 83714

EMAIL jeff@hatchda.com

PROPERTY OWNER Alpine Storage Condos, LLC
(if not the applicant)
MAILING ADDRESS 200 W. 36th St., Garden City, Idaho ZIP 83714

EMAIL jeff@hatchda.com, pmboiseaustin@gmail.com

Nature of Owner's Interest in this Development?

AGENT / REPRESENTATIVE Steve Thiessen - Hatch Design Architecture PHONE 208-5989-5032

MAILING ADDRESS 200 W. 36th Street, Boise, ID 83714 ZIP

EMAIL steve@hatchda.com

ENGINEER Corinne Graham - Civil Site Works

MAILING ADDRESS P.O. Box 6059, Boise, Idaho ZIP 83707

EMAIL PHONE 208-946-3874

SURVEYOR Chad Leatherman - LR Geo

MAILING ADDRESS 690 S. Industry Way, Ste. 55, Meridian, Idaho ZIP 83642

EMAIL chad@lr-geo.com PHONE 208-519-5900

PRE-APPLICATION INFORMATION

Date(s) of Pre-Application Meeting with Staff: 09/30/2026

Staff Name(s): Cynda Herrick

Date of Neighborhood Meeting if 5 or more lots: N/A
(Attached Required Information per VCC 9-5H-1.D)

PROPERTY INFORMATION

1. SIZE OF PROPERTY 2.811 Acres
2. AMOUNT OF ACREAGE OF ADJACENT LAND HELD BY THIS OWNER 0 Acres
3. ANY RESTRICTIONS ON THIS PROPERTY? Must show all easements on plat.
   Easements Idaho Power Blanket Power Line Easement I.N. 67342
   Deed Restrictions None Found
   Liens or encumbrances None contained within Title Commitment dated April 17, 2026

4. LEGAL DESCRIPTION Tax No. 184 in SE 1/4 of SE 1/4 Section 16 T18N R3E

5. TAX PARCEL NUMBER(S) RP18N03E169755

Quarter SE Section 16 Township 18N Range 3E

6. EXISTING LAND USES AND STRUCTURES ON THE PROPERTY:
The storage buildings are currently under construction.

7. ARE THERE ANY KNOWN HAZARDS ON OR NEAR THE PROPERTY (such as canals, hazardous material spills, soil or water contamination)? If so, describe and give location: No

8. ADJACENT PROPERTIES HAVE THE FOLLOWING BUILDING TYPES AND/OR USES:
North Residential
South Residential and Warehouse
East Road and Residential
West Storage Units

9a. TYPE OF TERRAIN: Mountainous ☐ Rolling ☐ Flat ☒ Timbered ☐

9b. DOES ANY PORTION OF THIS PARCEL HAVE SLOPES IN EXCESS OF 15%? Yes ☐ No ☒

9c. DESCRIBE ANY SIGNIFICANT NATURAL RESOURCES SUCH AS ROCK OUTCROPPING, MARSHES, WOODED AREAS: No

10a. WATER COURSE: No

10b. IS ANY PORTION OF THE PROPERTY LOCATED IN A FLOODWAY OR 100-YR FLOODPLAIN? (Information can be obtained from the Planning & Zoning Office) Yes ☐ No ☒

10c. ARE THERE WETLANDS LOCATED ON ANY PORTION OF THE PROPERTY? Yes ☐ No ☒

10d. WILL ANY PART OF THE PROPERTY BE SUBJECT TO INUNDATION FROM STORMWATER OVERFLOW OR SPRING MELTING RUN-OFF? No

10e. IS ANY PORTION LOCATED WITHIN 150-FT OF ANY LAKE, POND, RIVER, OR YEAR-ROUND FLOWING CREEK OR STREAM? THIS IS A RIPARIAN AREA AS DEFINED BY VCC 9-6-6.
Yes ☐ No ☒

11a. ROADS USED TO ACCESS SITE:
Describe how the site will be accessed: One access off of S. Sampson Trail

Existing roads are: Publicly maintained? ☒ Privately Maintained? ☐ or Combination of both? ☐

Existing road construction: Gravel ☐ Paved ☒ or Combination of both? ☐

Existing Road Widths: 21' of Pavement Existing Road Right-Of-Way Widths: 55'

11b. NUMBER OF PROPOSED ROADS: 0 ROW width: _____ Road width_____
Proposed roads will be: Public ☐ Private ☐ Proposed road construction: Gravel ☐ Paved ☐

11c. Anticipated Trip Generation Per Day: 10

The rates shown are recommended for general traffic estimation. Trip generation rates are subject to approval by the Valley County Engineer. Source: ITE – Trip Generation Manual

Roadway capacities and Levels of Service shall be evaluated according to the recommendation of the Transportation Research Board – Highway Capacity Manual, current edition. A level of service rating of C or better is required for all County roads.

Valley County Minimum Standards for Road Design and Construction - ITE – Trip Generation Manual		
Land Use	Unit	Average Daily Traffic Vehicle Per Day
Residential	Dwelling Unit	8
Retail	1000 sqft	40
Industrial	1000 sqft	10

12. DRIVEWAYS:

Will new driveway access points to existing roads be created? Yes ☒ No ☐

If so, who owns the road? Valley County

Are shared driveways proposed? If so, please explain why. Yes ☒ No ☐

One driveway for all condo units.

13a. EXISTING UTILITIES ON THE PROPERTY ARE AS FOLLOWS: None

13b. PROPOSED UTILITIES: Power, Well, Septic, and Storm Drainage

Proposed utility easement width _____ Locations_____

14. SOLID WASTE DISPOSAL METHOD: Individual Septic ☒ Central Sewage Treatment Facility ☐

If central sewer: North Lake RSWD ☐ Payette Lakes RWSD ☐ OTHER: _____

15. POTABLE WATER SOURCE: Public ☐ Water Association ☐ Individual ☒

If individual, has a test well been drilled? _____ Depth _____ Flow _____ Purity Verified? _____
Nearest adjacent well 375' (Well ID 484795) Depth 81 ft. Flow 30 GPM

16. ARE THERE ANY EXISTING IRRIGATION SYSTEMS? Yes ☐ No ☒

Are you proposing any alterations, improvements, extensions or new construction? Yes ☐ No ☒

If yes, explain: _____

17. DRAINAGE (Proposed method of on-site retention): Retention Pond
Any special drains? _____ (Please attach map)
Soil type(s): 3-Archabal loam
(Information can be obtained from the Natural Resource Conservation Service: websoilsurvey.nrcs.usda.gov)

18. WILL STREETS AND OTHER REQUIRED IMPROVEMENTS BE CONSTRUCTED PRIOR TO THE RECORDING OF THE FINAL PLAT? Yes ☒ No ☐

If not, indicate the type of surety that will be put up to ensure the construction of the improvements within one (1) year from the date of plat recording: _____

19. OUTLINE OF PROPOSED RESTRICTIVE COVENANTS:

Setbacks: Front ____ feet Sides ____ feet Rear ____ feet
Minimum construction value _____ Minimum square footage _____
Completion of construction required within _____ Days ☐ Months ☐ Years ☐
Resubdivision permitted / Lot Splits allowed? Yes ☐ No ☐ Mobile homes allowed? Yes ☐ No ☐
Other _____

20. LAND PROGRAM:

Open Areas and/or Common Areas Yes ☒ No ☐
Acreage in subdivision 2.811 Number of lots in subdivision 34 Condos
Typical width and depth of lots 44' by 23.5' Units
Typical lot area 1,034 sq.ft. Minimum lot area 917 sq.ft. Maximum lot area 1,045 sq.ft.
Lineal footage of streets n/a Average street length per lot n/a
Percentage of area in streets 0 %
Dedicating road right-of-way to Valley County? Yes ☒ No ☐
Percentage of area of development to be public (including easements) 10.4 %
Maximum street gradient n/a
Is subdivision to be completely developed at one time? Yes ☒ No ☐ - Attach phasing plan and timeline.

21. COMPLETE ATTACHED PLAN FOR IRRIGATION if you have water rights &/or are in an irrigation district.
    - Submit letter from Irrigation District, if applicable.

22. COMPLETE ATTACHED WEED CONTROL AGREEMENT.

23. COMPLETE ATTACHED IMPACT REPORT (a fillable pdf is available).
    - It must address potential environmental, economic, and social impacts and how these impacts are to be minimized.

24. SUBMIT A WILDLAND URBAN INTERFACE MITIGATION PLAN.
    - Proposed administrative plats of less than 5 lots and proposed subdivisions with lands less than 20% "forested" (see definition in VCC 10-7-2) are exempt from the professional requirement. For proposed subdivisions fitting these descriptions, the developer shall complete the plan (see the fillable “short form”).

Irrigation Plan

(Idaho Code 31-3805)

This land: □ Has water rights available to it
☒ Is dry and has no water rights available to it.

Idaho Code 31-3805 states that when all or part of a subdivision is "located within the boundaries of an existing irrigation district or canal company, ditch association, or like irrigation water deliver entity … **no subdivision plat or amendment to a subdivision plat or any other plat or map recognized by the city or county for the division of land will be accepted, approved, and recorded unless:**"

A. The appropriate water rights and assessment of those water rights have been transferred from said lands or excluded from an irrigation entity by the owner; or

B. The owner filing the subdivision plat or amendment to a subdivision plat or map has provided for the division of land of underground tile or conduit for lots of one acre or less or a suitable system for lots of more than one acre which will deliver water to those landowners within the subdivision who are also within the irrigation entity with the appropriate approvals:

   1. For proposed subdivisions located within an area of city impact, both city and county zoning authorities must approve such irrigation system.

   2. For proposed subdivisions outside of negotiated areas of city impact, the delivery system must be approved by the Planning and Zoning Commission and the Board of County Commissioners with the advice of the irrigation entity charged with the delivery of water to said lands (e.g., irrigation district).

To better understand your irrigation request, we need to ask you a few questions. Additional pages can be added. A list of the map requirements follows the short questionnaire. **Any missing information may result in the delay of your request before the Planning and Zoning Commission and ultimately the approval of your irrigation plan by the Board of County Commissioners as part of final plat approval.**

1. Are you within an area of negotiated City Impact? _____ Yes ___X___ No

2. What is the name of the irrigation district/company and drainage entities servicing the property?
   Irrigation: N/A
   Drainage: N/A

3. How many acres is the property being subdivided? 2.8 acres

4. What percentage of this property has water? 0

5. How many inches of water are available to the property? _____

6. How is the land currently irrigated? □ surface □ sprinkler □ irrigation well
   □ above ground pipe □ underground pipe

7. How is the land to be irrigated after it is subdivided? □ surface □ sprinkler ☒ irrigation well
   □ above ground pipe □ underground pipe

8. Describe how the head gate/pump connects to the canal and irrigated land and where ditches &/or pipes go.
   N/A

9. Is there an irrigation easement(s) on the property? ☐ Yes ☒ No

10. How do you plan to retain storm and excess water on each lot? _____

Please see ccivil drawings.

_____

11. How do you plan to process this storm water and/or excess irrigation water prior to it entering the established drainage system? (i.e. oil, grease, contaminated aggregates)

_____

Please see drainage report.

_____

Irrigation Plan Map Requirements

The irrigation plan **must be on a scalable map** and show all of the irrigation system including all supply and drainage structures and easements. Please include the following information on your map:

- ☐ All canals, ditches, and laterals with their respective names.
- ☐ Head gate location and/or point of delivery of water to the property by the irrigation entity.
- ☐ Pipe location and sizes, if any
- ☐ Rise locations and types, if any.
- ☐ Easements of all private ditches that supply adjacent properties (i.e. supply ditches and drainage ways).
- ☐ Slope of the property in various locations.
- ☐ Direction of water flow (use short arrows on your map to indicate water flow direction →).
- ☐ Direction of wastewater flow (use long arrows on your map to indicate wastewater direction ⟶).
- ☐ Location of drainage ponds or swales, if any where wastewater will be retained on property
- ☐ Other information: _____

Also, provide the following documentation:

- ☐ Legal description of the property.
- ☐ Proof of ownership.
- ☐ A written response from the irrigation entity and/or proof of agency notification.
- ☐ Copy of any water users' association agreement which shows water schedules and maintenance responsibilities.
- ☐ Copy of all new easements ready for recording (irrigation supply and drainage).
- ☐ If you are in a city area of impact, please include a copy of the approvals by the city planning and zoning commission and city council of your irrigation plan.

==========Applicant Acknowledgement==========

I, the undersigned, agree that prior to the Planning and Zoning Department accepting this application, I am responsible to have all the required information and site plans.

I further acknowledge that the irrigation system, as approved by the Planning and Zoning Commission and ultimately the Board of County Commissioners, must be bonded and/or installed prior to the recording of the plat or building permit.

Signed: _____ Date: 09 /_____/_____

Applicant

VALLEY COUNTY

WEED CONTROL AGREEMENT

It shall be the duty and responsibility of all landowners to control noxious weeds on their land and property, in accordance with Idaho Statute 22-2407.

The purpose of this agreement is to establish a cooperative relationship between Valley County and the undersigned Cooperator to protect the natural and economic values in the Upper Payette River watershed from damages related to the invasion and expansion of infestations of noxious weeds and invasive plants. This is a cooperative effort to prevent, eradicate, contain and control noxious weeds and invasive plants on public and private lands in this area. Factors related to the spread of weeds are not related to ownership nor controllable at agency boundaries. This agreement formalizes the cooperative strategy for management of these weeds addressed in Valley County's Integrated Weed Management Plan.

In this continuing effort to control Noxious Weeds, Valley County Weed Control will consult with the undersigned Cooperator and outline weed identification techniques, present optional control methods and recommend proper land management practices.

The undersigned Cooperator acknowledges that he/she is aware of any potential or real noxious weed problems on his/her private property and agrees to control said weeds in a timely manner using proper land management principles.

Valley County Weed Department can be contacted at 208-382-7199.

By:_____ By: *Valley County Weed Supervisor*

Applicant

Date: 09/30/2026

WILDLAND URBAN INTERFACE FIRE PROTECTION PLAN SHORT FORM

TITLE 10-7

Development Name: Alpine Storage Condos

Developer: Alpine Storage Condos LLC

Email: info@hatchda.com **Phone Number:** 208-475-3204

Mailing Address: 200 W 36th St, Boise, ID 83714

Preparer: Steve Thiessen

Email: steve@hatchda.com **Phone Number:** 208-598-5032

Mailing Address: 200 W 36th St, Boise, ID 83714

The purpose of this short form is to provide a simplified Wildland Urban Interface (WUI) fire protection planning option for smaller developments. It is intended to help applicants address basic wildfire risk considerations while supporting safe and resilient development practices in Valley County.

For more detailed guidance and requirements, please refer to the Valley County Wildland Urban Interface Fire Protection Plan Manual.

10-7-1: PURPOSE:

Valley County's community wildfire protection plan acknowledges that wildfire hazard areas exist throughout the county. Therefore, wildfire mitigation actions are prudent to enable safe habitation in these fire environments. The Valley County fire working group recommends that a requirement for the development and approval of a wildland urban interface fire protection plan be added as an addendum to the Valley County subdivision regulations ordinance. The existence of said plan will assist the Valley County planning and zoning commission and the structural fire districts in satisfying the current subdivision regulation, subsection 10-3-2-6D7 of this title. (Ord. 10-07, 8-26-2010)

10-7-2: DEFINITIONS:

APPROVED: Refers to approval as the result of review, inspection or tests by reason of accepted principles.

ASPECT: Generally, refers to the direction to which a mountain slope faces. For example: A slope that faces the sun in the afternoon has a westerly aspect or is a west facing slope.

DEFENSIBLE SPACE: Refers to that area between a building and an oncoming wildfire where the vegetation has been modified to reduce the wildfire threat and to provide an opportunity for firefighters to effectively defend the building.

FIRE-RESISTANT ROOF: There are four commercial roof fire ratings: Class A, B, C, and Unrated. Class A rating is obtained when material survives a severe fire test. Class B ratings are awarded after withstanding moderate fire exposure and Class C demonstrates survivability of only the lightest fire test.

FORESTED: Idaho Code title 38, chapter 1 (Idaho forestry act) defines "forestland" as meaning "any land which has upon it sufficient brush or flammable forest growth of any kind or size, living or dead, standing or down, including debris or growth following a fire or removal of forest products, to constitute a fire menace to life (including animal) or property".

FUEL BREAK: A natural or man-made barrier strategically located using topography to provide optimal fire control, typically to avoid vegetation or composed of vegetation arranged in such a way as to prevent fire spread.

PROFESSIONAL: Can include qualified professional forester, fire ecologist, or comparable experience. Professionals can be prequalified by the commission or recommended by the Valley County fire working group and kept on record at the planning and zoning office.

PROFESSIONAL FORESTER: An individual holding at least a Bachelor of Science degree in forestry from an accredited four (4) year institution. (This is consistent with Idaho state tax commission rule 960 of the Idaho administrative code, Idaho state tax commission, PDAPA 35.01.03, section 04.)

SLOPE: The variation of terrain from the horizontal; the number of feet of rise or fall per one hundred feet (100') measured horizontally, expressed as a percentage.

STRUCTURE: That which is built or constructed, an edifice or building of any kind or any piece of work artificially built up or composed or parts joined together in some manner.

VALLEY COUNTY FIRE WORKING GROUP: This group is given charter by the Valley County board of commissioners and is tasked with oversight of the community wildfire protection plan. This group is represented by local fire departments, SITPA, public land managers (USFS, IDL, BOR), Valley County Natural Resource Consultants, etc.

WILDFIRE: A wildland fire originating from an unplanned ignition, such as lightning, volcano, unauthorized and accidental human caused fire, and prescribe fires that are declared wildfires.

WILDLAND URBAN INTERFACE AREA: The line, area or zone where structures and other human development meets or intermingles with wildland or vegetative fuels. (Ord. 10-07, 8-26-2010, amd. Ord 2025-07, 12-1-2025)

10-7-3: BASIS FOR RECOMMENDATION:

Valley County adopted the International Fire Code, 2015, published by the building officials and Code Administrators International INC, adopted by the Idaho Fire Marshal. The adopted version of the foregoing codes shall be deemed superseded by successive versions of such codes as they ae

adopted or approved by the Idaho Building Code Board and the State of Idaho (Ord. 10-07, 8-26-2010; amd. Ord 2025-07, 12-1-2025)

10-7-4: SUBMISSION REQUIREMENTS:

A. General: All developers of proposed subdivisions shall provide a wildland urban interface fire protection plan (the plan) for review and then approval by the planning and zoning commission with their preliminary plat application or planned unit development submittal. The plan shall be submitted to the Wildfire Mitigation Director by Planning and Zoning Staff for review and comments to the Planning and Zoning Commission.

B. Content: The plan shall be based upon a site-specific wildfire risk assessment that includes consideration of location, topography, aspect, flammable vegetation, climatic conditions and fire history. The plan shall address water supply, access, fire protection systems and equipment, defensible space, and vegetation management.

1. Preparation: The plan shall be developed by a "professional" (see definition in section 10-7-2 of this chapter). Professionals can be prequalified by the commission, and a list will be maintained at the Valley County planning and zoning office.

2. Format: The plan shall consist of two (2) sections:

a. Wildfire Risk Assessment:
b. Wildfire Risk Mitigation:

3. Submittal, Implementation and Verification:

a. The plan shall be submitted with the preliminary plat application to the Valley County planning and zoning office.

b. Planned mitigation work must be completed or financially guaranteed prior to the recordation of the final plat. A schedule for the phased completion of mitigation work may be approved in conjunction with recordation of final plats.

c. Verification of completed implementation of mitigation actions will be the responsibility of the jurisdictional structural fire district. Where no structural fire district exists, the Valley County sheriff shall appoint a county representative. Each authority will act in conjunction with the office of the Wildfire Mitigation Director

4. Exceptions: Proposed administrative plats of less than five (5) lots and proposed subdivisions with lands less than twenty percent (20%) "forested" (see definition in section 10-7-2 of this chapter) are exempt from the professional requirement. For proposed subdivisions fitting these descriptions, the developer shall complete the plan (see the fire protection form). The plan for an administrative plat can be approved by the administrator upon receiving an approval letter from the Valley County Wildlife Mitigation director in conjunction with the applicable fire district.

5. Cost: The cost and implementation of the plan preparation shall be the responsibility of the applicant.

6. Plan Retention: The approved plan shall be retained at the Valley County planning and zoning office and the jurisdictional fire district or designated agency where no fire district exists. (Ord. 10-07, 8-26-2010; amd. Ord 2025-07, 12-1-2025)

a. Wildfire Risk Assessment: This portion of the plan includes a map and narrative describing the status of the land to be developed. At a minimum, the following must be included:

(1) Topographic map must be attached.

(2) Site description including discussion of slope(s), aspect(s), and significant topographic features.

The proposed condominium plat is located at 450 S Samson Trail in McCall's area of impact. South Samson Trail is a north-south roadway that provides a single travel lane in each direction and is classified as a minor collector in the McCall Transportation Master Plan. The 2.8 acre site is relatively flat and does not have any significant topographic features.

(3) Narrative describing existing vegetation and fuel hazards, distribution, and continuity.

The site has been cleared of vegetation. Planting will be added as per the County's approved landscape plan.

(4) Fire history, including historical occurrence, causes, typical wind and climatic conditions which influence fire behavior.

The Valley County Hazards and Risk Map does not show any historical fire occurrences on the property.

(5) Existing roads and bridges, including a description of widths, grade percentages and weight limits.

S. Samson Trail is classified as a minor collector and is maintained year around. The road is approximately 25' wide and does not feature signicant grades adjacent to the site.

(6) Location of existing structures and an estimate of the proposed density, types and sizes of planned structures.

The site consist of two storage structures that are approximately 37,000 sf. The building by a 50' paved drive aisle.

(7) Infrastructure that may affect wildland fire risk (i.e., existing power lines, railroad lines, propane tanks, etc.).

There are existing power lines accross the street to the east along Samson Trail. Propane is not proposed for this project.

(8) Description of existing features that may assist in controlling a wildfire (i.e., fuel breaks, water sources, etc.).

The building will be Type II-B non combustible construction. These buildings are surrounded by large paved drive aisles. MFPD has approved a 36,000 gallon water storage tank that will assist in controlling structural and wildfire.

(9) Current structural and wildland fire jurisdictional agencies. Valley County WUI Fire Protection Plan.

McCall Fire Protection District (MFPD). Please see the attached MFPD approval letter.

(10) Effect of proposed development on current wildland fire risk within the development area and to adjacent landowners.

The proposed condominium plat is assigned a Low Wild Fire Risk. There is very little vegetation on site. The site topography is relatively flat and would not contribute to rapid spread.

The water supply for fire suppression is readily available via a 36,000 gallon water tank. Fire apparatus access lanes are adequate to circulate equipment.

b. Wildfire Risk Mitigation: This portion of the plan includes a map(s) and narrative detailing planned wildfire hazard mitigation actions to be taken by the developer prior to individual lot development to mitigate risks to life and property from wildland fire. Specific items to be addressed include:

(1) Access - planned ingress and egress routes.

Ingress and egress to the storage facility is provided from S. Samson Trail and is adequate for emergency vehicles. Access to the site is provided via 40' wide approach. This access will be constructed to Valley County Roads standards.

The site provides adequate fire apparatus lanes to circulate equipment. Valley County Roads and MFPD were consulted during project design to ensure compliance with standards.

2) Water supply for structural and wildland fire response.

Water for structural and wildland fire response is provided via a 36,000 gallon water storage tank. Water for the tank is provided via a private well. The proposed fire suppression hs been approved by MFPD.

(3) Estimated response time and distances for jurisdictional fire agencies.

MFPD is 1.1 miles from the entrance to the storage facility. Estimated response time is 5-10 minutes.

(4) Planned internal fire protection systems and/or equipment, including buried tanks, wells, hydrants, drylines, etc., along with protective measures for systems and/or equipment.

Water for structural and wildland fire response is provided via a 36,000 gallon water storage tank. Water for the tank is provided via a private well. The proposed fire suppression hs been approved by MFPD. The tank will be inspected per MFPD standards to ensure water level is maintained. This water system has been determined by MFPD to provide adequate water supply to the facility. FDC will be installed per MFPD standards.

(5) Proposed infrastructure, including bridge standards, road widths, grades, signage, aboveground/belowground power lines, etc.

Drive aisles within the facility are a minimum 40' wide. There are no grades that exceed 5%. FDC installation and locations have been or will be installed per MFPD standards. Knox box will be provided per MFPD standards to access the facility.

(6) Safety zone locations.

The site features very little vegetation. Large paved drive aisles surround the buildings and the site. These aisles form a large man-made fuel brake. These large drive aisle allow for easy egress from the site.

(7) Planned live and dead fuel treatment actions, including modification through thinning, pruning, piling, chipping, and fuel break construction; and removal through commercial harvest, chipping and hauling or prescribed burning.

There is very little vegetation proposed for the site. Vegetation proposed along the frontage will be pruned to prevent a continous pathway. Any dead trees or plantings will be removed to prevent spread.

(8) Long term maintenance schedule to sustain fuel treatment effectiveness.

The condo owners associtation (COA) will implement a long term fuel maintence program.

Maintenance activities include:
- Maintaining adequate spacing between tree crowns to reduce fire spread potential
- Removing ladder fuels by pruning lower branches
- Managing surface fuels such as needles, woody debris, and slash
- Removing dead, dying, or diseased vegetation
- Maintaining defensible space zones around all structures
- Conducting annual inspections of treated areas
- Performing maintenance thinning or pruning every three (3) to five (5) years, depending on vegetation growth and site conditions
- Ongoing removal of regrowth and invasive species
- Seasonal cleanup prior to peak fire season
- Prohibiting open burning

The COA conducts annual reviews of fuel treatment effectiveness and coordinates with local fire authorities as needed. Maintenance standards and schedules are adjusted over time based on wildfire risk assessments, vegetation response, and updated fire behavior science.

(9) Analysis of the overall change in wildland fire risk within the development and to adjacent landowners once the planned mitigation actions are implemented. Attach map including adjacent area.

The planned wildfire mitigation actions are designed to reduce the likelihood, intensity, and spread of wildfire while improving overall community and landscape resilience. These actions directly address the primary factors that contribute to wildfire behavior: fuel load, fuel continuity, and ignition potential.

HATCH DESIGN ARCHITECTURE
200 w. 36th st., boise, idaho 83714 • phone 208.475.3204 • fax 208.475.3205 • email info@hatchda.com

VICINITY MAP

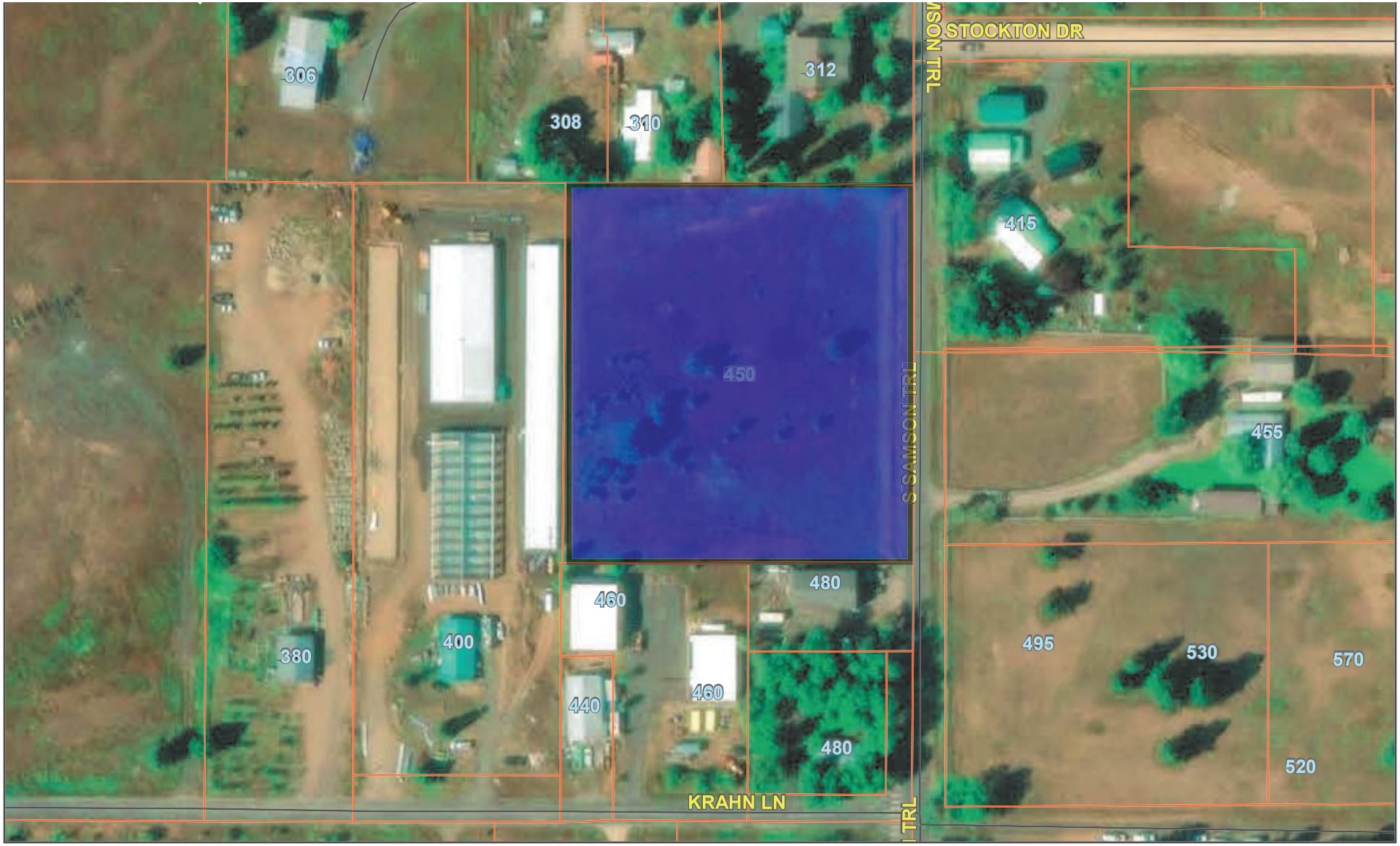

10/2/2026, 9:23:59 AM

- Address Points
- Roads
- Public
- Private
- Parcel Summary & Improvement Report

1:2,257

0 0.01 0.03 0.05 mi

0 0.02 0.04 0.08 km

Microsoft, Vantor

Valley County

Microsoft, Vantor | BLM Admin State | Valley County | Valley County GIS

McCALL
FIRE PROTECTION DISTRICT
201 Deinhard Lane | McCall, Idaho 83638 | (208) 634-7070 | Fax: (208) 634-5360
www.mccallfire.com

September 4, 2026

RE: Alpine Storage – 450 S. Samson Trail, McCall, Idaho

To Whom It May Concern:

McCall Fire Protection District (MFPD) has reviewed the submitted plans for the proposed Alpine Storage development at 450 S. Samson Trail.

The proposed fire department access and water supply configuration has been reviewed and approved by the MFPD. The approved water supply consists of a 36,000-gallon fire water storage tank provided in lieu of otherwise required fire-flow capacity.

McCall Fire Protection District has no objection to approval of the proposed development. All required fire apparatus access roads and the approved fire water supply shall be completed, operational, and accessible to the Fire Department prior to the start of vertical construction.

Final construction shall conform to the approved plans and applicable fire code requirements.

Respectfully,

Ryan Garber
Fire Prevention Officer
McCall Fire Protection District
(208) 634-7070

Outlook

Fw: Alpine Water Tank accessory inquiry

From Jeffery Hatch <jeff@hatchda.com>
Date Wed 9/2/2026 3:57 PM
To Steve Thiessen <steve@hatchda.com>

Jeff Hatch, AIA LEED AP
Hatch Design Architecture
200 w. 36th Street
Boise, ID 83714
O: 208-475-3206
C: 208-412-9250
E: Jeff@HatchDA.com

This communication may contain information that is privileged, confidential, legally privileged, and/or exempt from disclosure under applicable law. If you are not the intended recipient, you are hereby notified that any disclosure, copying, distribution, or use of the information contained herein (including any reliance thereon) is strictly prohibited. If this communication was received in error, please immediately contact the sender and destroy the material in its entirety, whether in electronic or hard copy format. ©2026

From: Ryan Garber <ryan@mccallfire.com>
Sent: Friday, 14 August 2026 11:37:22
To: Jeffery Hatch <jeff@hatchda.com>
Cc: Doug Miller <pmboiseaustin@gmail.com>; Cam Echanis <ce_hcs@msn.com>
Subject: Re: Alpine Water Tank accessory inquiry

Jeff,

Thanks for the changes. That all looks good.

Ryan

Captain Ryan Garber
Fire Prevention / Code Enforcement
McCall Fire & EMS
201 Deinhard Lane
McCall, ID 83638
www.mccallfire.com
Cell: (208) 469-0135

Schedule a Short Term Rental Safety Inspection
Schedule a Phone Call with Ryan
Schedule a Firewise Safety Inspection
Schedule another type of inspection



Sign up for Emergency Notifications

CodeRED™
Keeping citizens informed.

Please click to sign up for CodeRED!

This message has been sent to you as official business of the McCall Fire Protection District. If you have a concern about the authenticity of this communication, including any attachments, please contact the sender directly for confirmation, either by telephone or separate e-mail. Unencrypted e-mail is inherently insecure and should be treated with caution.

Electronic Privacy Notice. This e-mail, and any attachments, contains information that is, or may be, covered by the Electronic Communications Privacy Act, 18 U.S.C. 2510-2521, and is also confidential and proprietary in nature. If you are not the intended recipient, please be advised that you are legally prohibited from retaining, using, copying, distributing, or otherwise disclosing this information in any manner. Instead, please reply to the sender that you have received this communication in error, and then immediately delete it. Thank you in advance for your cooperation.

Book time to meet with me

From: Jeffery Hatch <jeff@hatchda.com>
Sent: Friday, August 7, 2026 5:06 PM
To: Ryan Garber <ryan@mccallfire.com>
Cc: Doug Miller <pmboiseaustin@gmail.com>; Cam Echanis <ce_hcs@msn.com>
Subject: Re: Alpine Water Tank accessory inquiry

Good afternoon Ryan,
Attached is the updated plans and here is a response to your comments:

On the Water Tank A-1.6 the Hydrant Head (1) sits maybe 10 feet in from the end of the tank and on the Site Plan A-1.0 the purposed fire department connection (13) is another 10 feet or so from the end of the tank. How do you plan to extend that 20'?
Response: In field measuring the tank location and the fire department connection, we updated the site plan to reflect the placement. We would propose adding a 3' extension to the access drive to ensure that the connection is with 10', see updated See A-1.0 site plan reflecting the requested changes.

Also, the plans show that the Fire Department Connection #13 is very close to the gate. Functionally, that means the engine would likely have to position halfway through the gate to draft. My suggestion would be to move it closer to S Samson near #23.
Response: The connection is directly attached to the tank, see updated Sheet A-1.0 keynote 13 and A-1.6.

Also is the vent (number 4 on the keynote) combined with the red/green level indicator (2)?
Response: Sheet A-1.6 updated per Cam's e-mail, see keynote #4.

Please let us know if everything looks good, and we have your blessing to proceed. Or let us know if you have any other questions/ comments.

Best regards,

Jeff Hatch, AIA LEED AP
Hatch Design Architecture
200 w. 36th Street
Boise, ID 83714
O: 208-475-3206
C: 208-412-9250
E: Jeff@HatchDA.com
This communication may contain information that is privileged, confidential, legally privileged, and/or exempt from disclosure under applicable law. If you are not the intended recipient, you are hereby notified that any disclosure, copying, distribution, or use of the information contained herein (including any reliance thereon) is strictly prohibited. If this communication was received in error, please immediately contact the sender and destroy the material in its entirety, whether in electronic or hard copy format. ©2026

From: Cam Echanis <CE_HCS@msn.com>
Sent: Friday, August 7, 2026 3:00 PM
To: Ryan Garber <ryan@mccallfire.com>
Cc: Jeffery Hatch <jeff@hatchda.com>; Doug Miller <pmboiseaustin@gmail.com>
Subject: Re: Alpine Water Tank accessory inquiry

Ryan
Not a combo vent/meter. We can put the vert between the clapper "3" and hydrant head "1". See attached sketch.

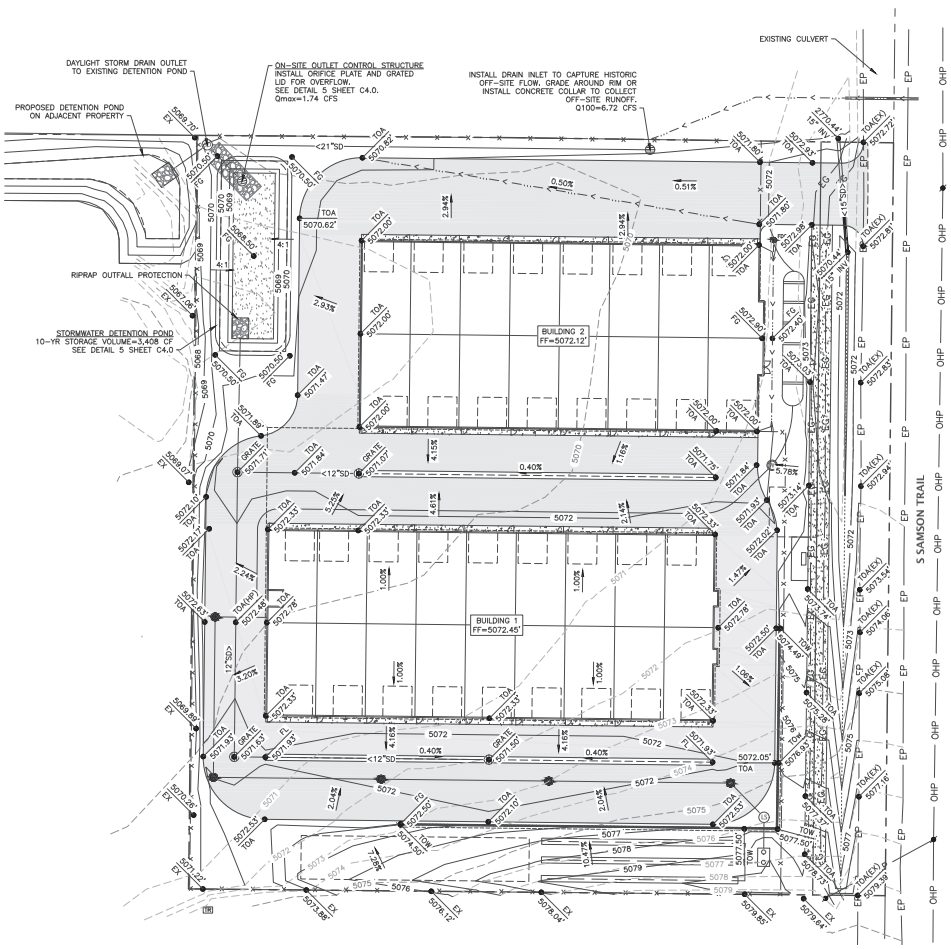

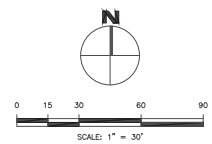

LEGEND

5070	PROPOSED MAJOR CONTOUR (5')
5072	PROPOSED MINOR CONTOUR (1')
5070	EXISTING MAJOR CONTOUR (5')
5072	EXISTING MINOR CONTOUR (1')
2.00%	DRAINAGE ARROW WITH PERCENT SLOPE

ABBREVIATIONS

CL	CENTERLINE
EX	EXISTING GROUND
FF	FINISHED FLOOR ELEVATION
FG	FINISHED GRADE
FL	FLOW LINE
GRATE	INLET ELEVATION
HP	HIGH POINT
INV	INVERT
ME	MATCH EXISTING
RIM	RIM ELEVATION
TVC	TOP BACK OF VERTICAL CURB
TOA	TOP OF ASPHALT
TOC	TOP OF CONCRETE
TOW	TOP OF WALL

GRADING NOTES

1. SLOPE FINISHED GRADE AWAY FROM BUILDINGS PER INTERNATIONAL BUILDING CODE.
2. ALL VALVE COVERS, MANHOLE RIMS, AND LIDS SHALL BE SET FLUSH WITH FINISHED ASPHALT GRADES.
3. NO GRADING IS PERMITTED ON ADJACENT PROPERTY. MATCH INTO EXISTING GRADE 2' FROM PROPERTY BOUNDARY. NO DRAINAGE SHALL BE ALLOWED TO PASS FROM THE PROJECT SITE ONTO ADJACENT PROPERTY.
4. NO SIDEWALKS SHALL EXCEED 2.0% CROSS SLOPE AND 5.0% RUNNING SLOPE (NO TOLERANCES ALLOWED).
5. ANY UNCONTROLLED FILL ENCOUNTERED BENEATH PROPOSED BUILDING PADS AND DRIVE AISLES SHALL BE EXCAVATED TO SUFFICIENT DEPTHS TO EXPOSE COMPETENT NATIVE SOILS, REPLACED, AND RECOMPACTED.
8. PRIOR TO PLACEMENT OF ANY GENERAL FILL, THE SITE SUBGRADE SHALL BE PREPPED IN ACCORDANCE WITH THE GEOTECHNICAL REPORT. THE PREPPED SUBGRADE SHALL BE OBSERVED AND APPROVED BY THE PROJECT GEOTECHNICAL ENGINEER PRIOR TO PLACEMENT OF FILL MATERIALS.
9. FILL PLACED TO DEVELOP BUILDING PADS SHALL MEET THE REQUIREMENTS FOR GENERAL FILL. GENERAL FILL USED FOR SITE GRADING MAY BE OBTAINED FROM ON-SITE EXCAVATIONS OR APPROVED BORROW SOURCES. GENERAL FILL MATERIAL SHALL HAVE A MAXIMUM PARTICLE SIZE LESS THAN 6 INCHES AND SHALL BE FREE OF EXCESS MOISTURE, ORGANIC MATTER AND DEBRIS. REFER TO THE GEOTECHNICAL REPORT FOR ADDITIONAL REQUIREMENTS.

PROFESSIONAL ENGINEER LICENSED 16970 8-27-26 STATE OF IDAHO CORINNE M. GRAHAM

CSW CIVIL SITE WORKS
PO BOX 6059
BOISE, ID 83707
cgraham@cswengineering.com
(208) 946-3874

REV. NO.	DESCRIPTION	DATE

FILE NAME: 23005-C-GRADING PLAN.DWG

DESIGNED:	C. GRAHAM
DRAWN:	C. GRAHAM
CHECKED:	C. GRAHAM
APPROVED:	C. GRAHAM

PREPARED FOR:
CAM ECHANIS

ALPINE STORAGE
450 S SAMSON TRAIL, McCALL, IDAHO
GRADING/DRAINAGE/STORMWATER PLAN

CSW PROJECT NO. 23005
DRAWING DATE 08/27/2026

C3.0

© COPYRIGHT 2026 CIVIL SITE WORKS LLC. THIS INSTRUMENT IS THE PROPERTY OF CIVIL SITE WORKS LLC. ANY REPRODUCTION, REUSE, OR MODIFICATION OF THIS INSTRUMENT OR ITS CONTENTS WITHOUT EXPRESS WRITTEN PERMISSION OF CIVIL SITE WORKS LLC IS STRICTLY PROHIBITED.

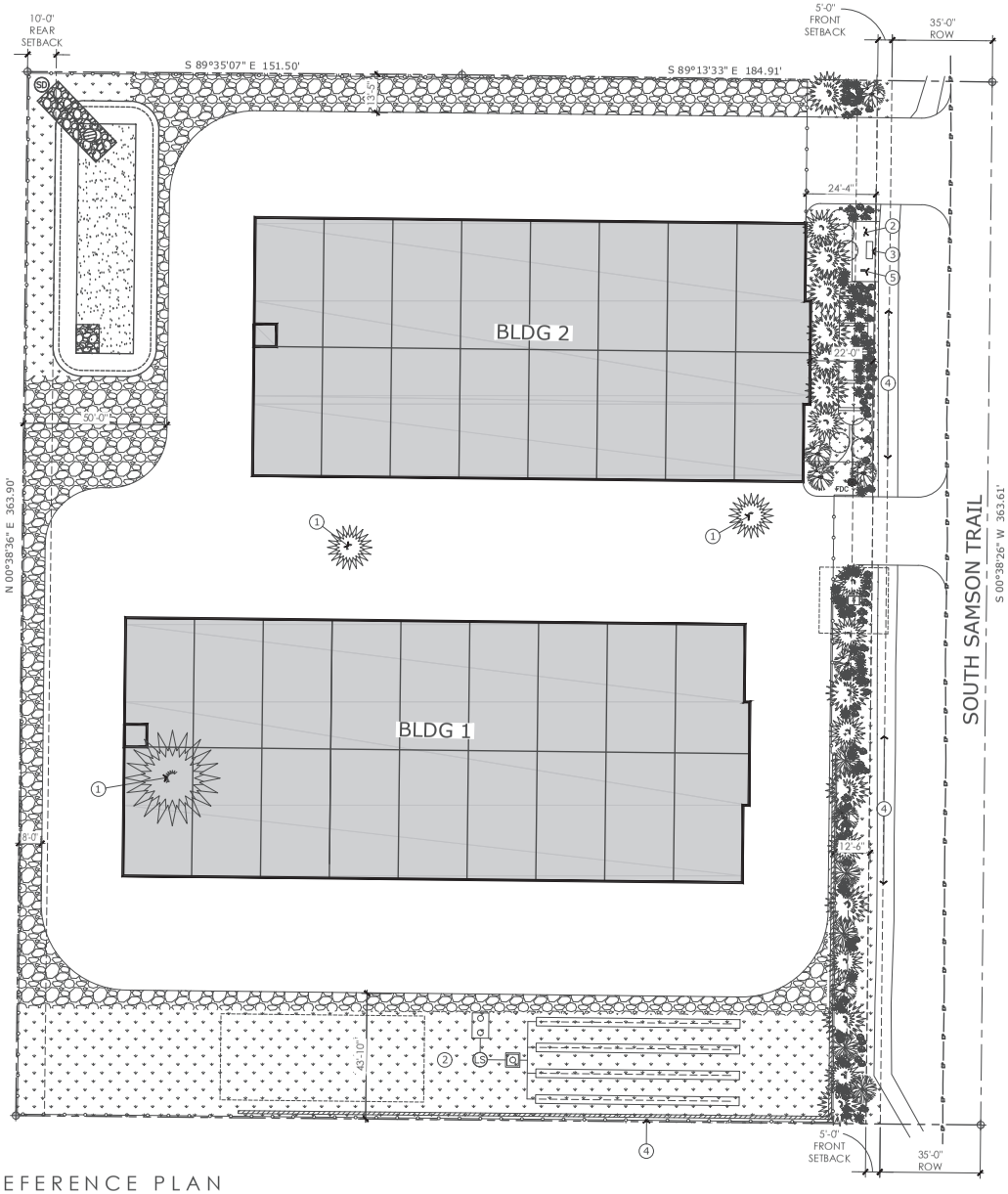

SITE REFERENCE PLAN

SCALE: 1"=20'-0"

LANDSCAPE SCHEDULE

	SYMBOL	BOTANICAL NAME	SIZE	MATURE SIZE H&W	CLASS	QTY
DECIDUOUS TREES		COMMON HACKBERRY CELTIS OCCIDENTALIS	2" CAL. B&B	45' x 35'	CLASS II	5
		RIVER BIRCH BETULA NIGRA	2" CAL. B&B	40' x 35'	CLASS II	6
		AMUR MAPLE ACER GINNALA	2" CAL. B&B	20' x 20'	CLASS I	7
CONIFEROUS TREES		BOTANICAL NAME	SIZE	MATURE SIZE H&W		QTY
		WESTERN LARCH LARIX OCCIDENTALLIS	6' HT.	100' x 20'		9
		ENGELMANN SPRUCE PICEA ENGELMANNII	6' HT.	100' x 15'		10
GROUND COVERS		BOTANICAL NAME	SIZE	MATURE SIZE H&W		QTY
		NATIVE SEED MIX				17,675 S.F.
		PERMABARK				9,227 S.F.
SHRUBS		BOTANICAL NAME	SIZE	MATURE SIZE H&W		QTY
		CALAMAGROSTIS X ACUTIFLORA FEATHER REED GRASS	2 GAL	3' x 2'		40
		HOSTA FORTUNEI PLANTAIN LILY	3 GAL	3' x 4'		40
		PINUS SYLVESTRIS HILLSIDE CREEPER	5 GAL	5' x 8'		46

KEYNOTES

1. EXISTING TREES TO BE REMOVED.
2. PROPOSED PUBLIC BIKE RACK.
3. PROPOSED PUBLIC BENCH.
4. EXISTING PUBLIC RECYCLED ASPHALT PATHWAY.
5. PUBLIC BIKE FIX-IT STATION.

LANDSCAPING GENERAL NOTES

A. ALL PLANT MATERIALS SHALL BE WATERED BY THE PROPOSED PRIVATE AUTOMATIC IRRIGATION SYSTEM.

B. ALL PLANTINGS TO BE SALT TOLERANT.

SCENIC ROUTE CALCS

FRONTAGE LENGTH: 364'

REQUIRED TREES: 1 PER EVERY 10'
364/10= 36.4 TREES WITH NOT LESS THAN 50% BEING EVERGREEN.

PROVIDED TREES: 19 EVERGREEN AND 18 DECIDUOUS TREES, 37 TOTAL

REQUIRED SHRUBS: 3 PER EVERY 10'
364/3= 121.3 SHRUBS

PROVIDED SHRUBS: 126 SHRUBS

HATCH DESIGN ARCHITECTURE
6126 W. STATE ST.
BOISE, IDAHO 83703
OFFICE: (208) 475-3204
FAX: (208) 475-3205

COPYRIGHT 2025
JEFF HATCH

THIS PLAN AND/OR DESIGN ARE NOT TO BE CHANGED OR COPIED IN ANY FORM, NOR ARE THE DOCUMENTS TO BE ASSIGNED TO A THIRD PARTY WITHOUT WRITTEN CONSENT AND PROPER COMPENSATION TO HATCH DESIGN ARCHITECTURE.

THE USE OF THE PLANS SHALL BE RESTRICTED TO THE ORIGINAL SITE FOR WHICH THEY WERE PREPARED. DRAWINGS, SPECIFICATIONS AND OTHER DOCUMENTS, INCLUDING THOSE IN ELECTRONIC FORM, PREPARED BY THE DESIGNER AND THE DESIGNER'S CONSULTANTS ARE INSTRUMENTS OF SERVICE FOR USE SOLELY WITH RESPECT TO THIS PROJECT. THE DESIGNER AND THE DESIGNER'S CONSULTANTS SHALL BE DEEMED THE AUTHORS AND OWNERS OF THEIR RESPECTIVE INSTRUMENTS OF SERVICE AND SHALL RETAIN ALL COMMON LAW, STATUTORY AND OTHER RESERVED RIGHTS, INCLUDING COPYRIGHTS.

NEW CONSTRUCTION FOR:

ALPINE STORAGE

450 S SAMSON TRAIL, MCCALL, ID

DELTA	DATE	DESCRIPTION- COMMENTS

DATE:	NOV 2025
DRAWN BY:	ST
CHECKED BY:	JLH
JOB NUMBER:	23116

SHEET TITLE

LANDSCAPE PLAN

SHEET NUMBER

L-1.0

SHEET

HATCH
DESIGN
ARCHITECTURE
0 w. 36th st., boise, idaho 83714 • phone 208.475.3204 • www.hatchda.com • email info@hatchda.com

Condominium Plat Narrative Alpine Storage

September 30, 2026

Valley County Planning and Zoning
Attn: Cynda Herrick
700 South Main Street
PO Box 1350
Cascade, ID 83611

RE: Condominium Plat for Alpine Storage
450 S. Samson Rd., McCall, ID 83638

The applicant is proposing a condominium plat of the alpine Storage facility so that individual units can be sold. The internal road and easements within the site will be private and will be maintained by the owners association. Potable water will be provided by a private well. Sanitary sewage disposal will be provided by a private septic system. The Alpine Storage site is not within an irrigation district. Pressurized irrigation will be provided via a private well.

The project has met all the conditions of the PUD approval (PUD-23-02, CUP-23-11, DR-24-28 & SR-24-11) and the building permit has been issued. The project is currently under construction and scheduled to be completed by the end of 2026.

Please contact our office with any questions you may have in reviewing the application materials.

Sincerely,



Jeff Hatch, AIA LEED AP
HATCH DESIGN ARCHITECTURE

Parametrix No. 314-4875-001 – Task 02.148

Cynda Herrick, AICP, CFM
Valley County Planning and Zoning Director
219 North Main Street
PO Box 1350
Cascade, ID 83611

Re: Alpine Storage – Revised Grading and Drainage Plans and Stormwater Calculations

Dear Cynda:

I have reviewed the above-referenced documents against the current Valley County (VC) Private and Public Road standards. Per my review and in coordination with the Owner's engineer, the plans and stormwater calculations meet the required standards; therefore, we are recommending approval of the documents.

Please contact me with any questions or comments.

Sincerely,

PARAMETRIX

Paul Ashton, PE

cc: Steve Thiessen/ Hatch Design Architecture
Jeff Hatch/Hatch Design Architecture
Corinne Graham/Civil Site Works
Cody Janson/Parametrix

CONDOMINIUM DECLARATION

FOR

ALPINE STORAGE

CONDOMINIUMS

TABLE OF CONTENTS

Section 1 RECITALS 1

1.1 Property Covered 1
1.2 Storage Use 1
1.3 Purpose 1

Section 2 DECLARATION 1

Section 3 ADDITIONAL DEFINITIONS 2

Section 4 NATURE AND INCIDENTS OF CONDOMINIUM OWNERSHIP 4

4.1 Estates of an Owner of a Condominium 4
4.2 Title 4
4.3 No Further Division 4
4.4 Inseparability of Condominiums 5
4.5 Partition of Common Area Not Permitted 5
4.6 Taxes and Assessments 5
4.7 Owner's Rights with Respect to Interiors 5

Section 5 EASEMENTS 5

5.1 Easements for Encroachments 5
5.2 Easements of Access for Repair, Maintenance, and Emergencies 6
5.3 Owner's Right to Support 6
5.4 Ingress/Egress Easement 6
5.5 Association's Right to Use of Common Area 6
5.6 Declarant's Right Incident to Construction 7
5.7 Emergency Easement 7
5.8 Recorded Easements 7
5.9 Easements for Annual Inspection 7
5.10 Easements Deemed Created 7

Section 6 DESCRIPTION OF CONDOMINIUM 7

Section 7 USES AND REGULATION OF USES 8

7.1 Storage Purposes 8
7.2 Permissible Uses 8
7.3 Prohibited Uses 8
7.4 Unit Rental 10
7.5 Vehicle Parking 10
7.6 Driving Areas and Walkways 10
7.7 Signs 11
7.8 Exterior Appearance 11
7.9 Trash Collection 11
7.10 Units for Sale or Lease and Realtor Signage 11
7.11 Maintenance of Interiors and Limited Common Area 11

7.12 Prohibition of Damage and Certain Activities 12
7.13 No Hazardous Activities 12
7.14 Energy Devices, Outside 13
7.15 Construction and Structural Alterations 13
7.16 No Smoking 13
7.17 Right to Enjoy and Use Units 13

Section 8 ALPINE STORAGE CONDOMINIUM OWNERS ASSOCIATION……13

8.1 Creation and Designation of Association 13
8.2 Membership 14
8.3 Member Meetings 14
8.4 Voting 14
8.5 Board of Directors 14
8.6 Delegation of Authority 14
8.7 Powers of the Association 15
8.8 Duties of the Association 18
8.9 Immunity and Indemnification 19
8.10 Waiver of Consequential Damages 19

Section 9 ASSESSMENTS **20**

9.1 Covenant to Pay Assessments 20
9.2 Rate of Assessment 20
9.3 Regular Assessments 20
9.4 Special Assessments 21
9.5 Limited Assessments 21
9.6 Notice and Assessment Due Date 22

Section 10 ENFORCEMENT OF ASSESSMENTS; LIENS **22**

10.1 Right to Enforce 22
10.2 Assessment Liens 22
10.3 Method of Foreclosure 23
10.4 Required Notice 23
10.5 No Subordination 23
10.6 Rights of Mortgagees 23
10.7 Declarant Exemption 24

Section 11 RIGHTS TO COMMON AREAS **24**

11.1 Use of Common Area 24
11.2 Delegation of Right to Use 24
11.3 Damages 25

Section 12 MECHANIC'S LIEN RIGHTS **25**

Section 13 INSURANCE **25**

13.1 Types of Insurance 25
13.2 Form 26
13.3 Insurance Proceeds 27
13.4 Owner's Own Insurance 27

13.5 Mutual Waiver of Subrogation Rights 27

Section 14 CASUALTY, DAMAGE, OR DESTRUCTION **27**

14.1 Association As Agent 27
14.2 General Authority of Association 28
14.3 Estimate of Costs 28
14.4 Repair or Reconstruction 28
14.5 Funds for Reconstruction 28
14.6 Disbursement of Funds for Repair or Reconstruction 28
14.7 Decision Not to Rebuild 29

Section 15 CONDEMNATION **29**

15.1 Consequences of Condemnation 29
15.2 Proceeds 29
15.3 Complete Taking 29
15.4 Partial Taking 29
15.5 Reorganization 30
15.6 Reconstruction and Repair 30

Section 16 DISCLAIMERS, WAIVERS, AND ACKNOWLEDGMENTS **30**

16.1 Disclaimer and Waiver of Warranties 30

Section 17 RESOLUTION OF DISPUTES **31**

17.1 Agreement to Avoid Litigation 31
17.2 Exemptions 31
17.3 Dispute Resolution 32

Section 18 DECLARANT CONTROL PERIOD **33**

18.1 Declarant Control Period 33
18.2 Project Management 33
18.3 Declarant Exemptions 34
18.4 Declarant's Exemption from Assessments 34
18.5 Assignment of Declarant's Rights 34

Section 19 MISCELLANEOUS **35**

19.1 Amendment 35
19.2 Mortgage Protection 35
19.3 Enforcement and Non-Waiver 35
19.4 Affects Title 36
19.5 Registration of Mailing Address 36
19.6 Interpretation 36
19.7 Owner's Obligations Continue 37
19.8 Exhibits 37
19.9 Acknowledgement and Waivers 37

EXHIBITS

EXHIBIT A — Legal Description of the Property

EXHIBIT B — Plat of Alpine Storage Condominiums

EXHIBIT C — Articles of Incorporation

EXHIBIT D — Proportionate Interest in Common Area

CONDOMINIUM DECLARATION

FOR

ALPINE STORAGE CONDOMINIUMS

THIS CONDOMINIUM DECLARATION FOR ALPINE STORAGE CONDOMINIUMS (this "**Declaration**") is made effective as of_____, 2024 (the "**Effective Date**"), by , LLC, an Idaho limited liability company ("**Declarant**"). Capitalized terms not otherwise defined in the text of this Declaration are defined in Section 3.

SECTION 1 RECITALS

1.1 Property Covered. Declarant is the owner of that certain real property located in Valley County, Idaho, legally described in the Exhibit A attached hereto and incorporated herein by this reference (the "**Property**"), as shown on the final plat for Alpine Storage Condominiums, recorded in the real property records of Valley County, Idaho, on _____, 2024, as Instrument No._____, Book of Plats at Pages _____through_____, a copy of which is attached as Exhibit B and incorporated herein by this reference (the "**Plat**").

1.2 Storage Use. Declarant intends to develop the Property with multiple storage condominium buildings (the "**Buildings**") in accordance with the Plat, this Declaration, and the development approvals now or hereinafter obtained from Valley County and other governing authorities. The Property, together with the Buildings and every other improvement or structure thereon, and every easement or right appurtenant thereto, is referred to in this Declaration as the "Project." The Project may be commonly known as the "Alpine Storage Condos," or "Alpine StorageCondominiums."

1.3 Purpose. The purpose of this Declaration is to provide for condominium ownership of the Project pursuant to the Condominium Act, designate Common Area and Limited Common Area, create the Association as the management body to administer the Project pursuant to the Condominium Act, and to set forth the restrictions, covenants, limitations, easements, conditions, and equitable servitudes that apply to and are unique to the Project and this condominium ownership regime (collectively "**Restrictions**").

SECTION 2 DECLARATION

Declarant declares that the Project and every Unit and portion thereof is and shall be held, sold, conveyed, encumbered, hypothecated, leased, used, occupied, and improved in accordance with and subject to the provisions of this Declaration, each and all of which are declared to be in furtherance of a general plan: (a) for the creation, maintenance, and sale of an ownership in fee simple of separate interests in Units and for co-ownership with others, as tenants-in-common, of Common Area and Limited Common Area, all pursuant to the Condominium Act; and (b) to protect, enhance, and preserve the value, amenities, desirability, and attractiveness of the Project and to ensure a well-integrated, high quality storage condominium development. This Declaration shall: (i) run with the land and shall be binding upon any Person having or acquiring any right, title, or interest in the Project and every Unit and portion thereof; (ii) inure to the benefit of the

Project and every Unit and portion thereof; and (iii) inure to the benefit of and be binding upon Declarant and each Owner having or holding any right, title, or interest in any Unit or portion of the Project, and their successors, heirs, and assigns.

SECTION 3 ADDITIONAL DEFINITIONS

"**Applicable Laws**" means all applicable federal, state, and local laws, rules, regulations, ordinances, and orders relating to the use, occupancy, and/or ownership of the Project or any portion thereof.

"**Articles**" mean the Articles of Incorporation of the Association, a true, correct, and certified copy of which is attached hereto as Exhibit C and incorporated herein by this reference, as the same may be amended from time to time in accordance with the provisions thereof; provided, however, in order to be effective such amendment must reference this Declaration, as amended, and be recorded in the real property records of Valley County, Idaho.

"**Assessments**" mean the Regular Assessments, Special Assessments, and Limited Assessments, together with any late payment charges, interest, administrative fees, and costs (including without limitation attorneys' fees) incurred in collecting the same.

"**Association**" means Alpine Storage Condominium Owners Association, Inc., an Idaho nonprofit corporation, its successors, and assigns.

"**Association Rules**" means the rules and regulations relating to the Project that may be adopted, amended, or repealed from time to time by the Board, as more particularly described in Section 8.7.3 hereof.

"**Board**" means the board of directors of the Association.

"**Bylaws**" mean the bylaws of the Association, as the same maybe amended from time to time in accordance with the provisions thereof.

"**Common Area**" means: (a) all portions of the Project other than the Units, including all Limited Common Area; (b) all leases, licenses, use rights, or agreement rights for amenities or facilities owned or held by or for the benefit of the Association from time-to-time; and (c) any personal property owned or held by or for the benefit of the Association from time to time. Common Area may be established from time to time by Declarant or the Association on any portion of the Project by describing such area on the Plat, by granting or reserving it in a deed or other instrument, or by designating it as such in this Declaration. In addition, the Association may acquire any Common Area it deems necessary and/or beneficial to the Project.

"**Condominium**" means a separate ownership interest in a Unit together with an undivided tenant-in-common interest in the Common Area (expressed as percentages of the entire ownership interest in the Common Area), as set forth in Exhibit D attached hereto and incorporated herein by this reference.

"**Condominium Act**" means the Condominium Property Act of the State of Idaho, Idaho Code Section 55-1501 et seq., as it may be amended from time to time.

"**Condominium Documents**" means this Declaration, the Plat, the Articles, the Bylaws, the Association Rules, the Management Agreement, and any other procedures, rules, regulations, or policies adopted under such documents by the Board, as the same may be amended from time to time according to their terms.

"**Declarant Control Period**" has the meaning set forth in Section **18.**

"**Lessee**" shall mean any Person leasing all or any part of a Condominium from any Owner.

"**Limited Assessment**" means a charge against a particular Owner for an expense directly attributable to such Owner, equal to the cost incurred or estimated to be incurred by the Association in connection with corrective action or maintenance, repair, replacement, and operation activities performed pursuant to the provisions of this Declaration, including damage to or maintenance, repair, replacement, and operation activities performed for any Common Area or the failure of an Owner to keep the Owner's Condominium in proper repair, and including interest thereon as provided in this Declaration or for any goods or services provided by the Association benefiting less than all Owners, as more particularly described in Section 9.5 herein.

"**Limited Common Area**" means those portions of the Common Area designated for the exclusive use of an Owner or Owners to the exclusion, limitation, or restriction of other Owners. Limited Common Area may be established from time to time by Declarant or the Association on any portion of the Project by describing such area on the Plat, by granting or reserving it in a deed or other document or instrument, or by designating it as such in this Declaration. The term Common Area as used in this Declaration shall include Limited Common Area.

"**Management Agreement**" means any agreement and all amendments thereto entered into by the Association and the Management Company, providing for the management, maintenance, and operation of the Project, including, without limitation the Common Area, by the Management Company.

"**Management Company**" means the Person hired by the Association to manage the Project on the terms and conditions set forth in a Management Agreement.

"**Member**" means each Person, including Declarant, that is a member of the Association pursuant to the provisions of Section 8.2.

"**Mortgage**" means any mortgage, deed of trust, or other security instrument by which a Condominium or any part thereof is encumbered.

"**Mortgagee**" means any Person or any successor to the interest of such Person named as the mortgagee, trust beneficiary, or creditor pursuant to any Mortgage under which the interest of an Owner's interest in its Condominium, or successor to the interest of such Owner, is encumbered.

"**Owner**" means the record owner, whether one or more Persons, holding fee simple title to a Condominium. The term "Owner" shall not refer to any Mortgagee, unless and until such Mortgagee has acquired fee simple title pursuant to foreclosure or other proceedings.

"**Person**" means an individual, corporation, trust, estate, partnership, limited liability company, association, joint venture, government, government subdivision or agency, and any other legal entity.

"**Regular Assessment**" means an assessment by the Association to provide for the payment of all estimated expenses growing out of or connected with the Project as a whole, as more particularly described in Section 9.3.

"**Special Assessment**" means that portion of the costs of the capital improvements, replacements, equipment purchases and replacements, or shortages in Regular Assessments which are authorized to be paid to the Association pursuant to the provisions of this Declaration as more particularly described in Section 9.4.

"**Unit**" means the separate ownership interest component of a Condominium, as bounded by the unfinished interior surfaces of the perimeter: (a) walls; (b) floors; (c) ceilings; and (d) doors (including door frames and door trim) of each Unit as shown on the Plat, together with the airspace so encompassed. The Unit includes all of the following within the said boundaries of each Unit shown on the Plat: (i) all finishes and coverings on the interior surfaces of said perimeter walls, floors, ceilings, windows, and doors, including without limitation paneling, wood, tile, paint, paper, carpeting, and texturing; (ii) all fixtures, improvements, hardware, and appliances; and (iii) all heating and refrigerating elements or related equipment, utility lines and outlets, electrical fixtures, pipes, and all other related equipment required to provide heating, air-conditioning, electrical, and utility services located within and serving only the Unit. The following are not part of a Unit: (A) bearing walls; (B) structural columns; (C) floors; (D) roofs; (E) foundations; and (F) pipes, conduits, wires and other utility installations that serve more than one Unit, except the outlets thereof when located within the Unit, provided, however, that a Unit shall not include any of the structural components of the Building or utility or service lines located within a Unit that serve more than one Unit.

SECTION 4 NATURE AND INCIDENTS OF CONDOMINIUM OWNERSHIP

4.1 Estates of an Owner of a Condominium. The Project is divided into Condominiums, each consisting of a separate interest in a Unit and an undivided tenant-in-common interest in the Common Area. The percentage of ownership interest in the Common Area that is to be allocated to each Condominium as a whole for purposes of Assessments, tax assessment under Section 55-1514 of the Condominium Act, and liability as provided by Section 55-1515 of the Condominium Act, is set forth on the attached Exhibit D.

4.2 Title. Title to a Condominium may be held or owned by any Person and in any manner in which title to any other real property may be held or owned in the State of Idaho.

4.3 No Further Division. No Owner may divide, adjust, or further condominium such Owner's Unit without the prior written approval of the Association, Valley County, and

all other governing authorities whose approval is required, and all such divisions, adjustments, and further condominium must comply with any condominium project amendment requirements of Valley County, and otherwise comply with all Applicable Laws.

4.4 Inseparability of Condominiums. No part of a Condominium, or of the legal rights comprising ownership of a such Condominium may be separated from any other part thereof during the period of Condominium ownership prescribed herein, so that each Unit and the undivided interest in the Common Area appurtenant to such Unit shall always be conveyed, devised, encumbered, transferred, and otherwise affected only as a complete Condominium and shall not be transferred in any way resulting in the division of the Condominium. Every gift, devise, bequest, transfer, encumbrance, conveyance, or other disposition of the Condominium or any part thereof shall be presumed to be a gift, devise, bequest, transfer, encumbrance, or conveyance, respectively, of the entire Condominium together with all appurtenant rights created by law or this Declaration.

4.5 Partition of Common Area Not Permitted. The Common Area shall be owned in common by all the Owners of Condominiums, and no Owner may bring any action for partition thereof.

4.6 Taxes and Assessments. Each Owner shall execute such instruments and take such actions as may reasonably be specified by the Association to obtain separate real property tax assessments of the interest of each Owner in each Condominium. If any taxes of special districts or other assessments may, in the opinion of the Association, nevertheless, be a lien on the Property or any part thereof, the Association shall pay the same and assess the same to the responsible Owner or Owners. Each Owner shall pay the taxes and assessments assessed against such Owner's Condominium, or interest therein, and such Owner's interest in the Common Area, or any part of any or all of the foregoing. The Association reserves the right to protest any tax valuations or assessments by any taxing government agency and to pay for any costs associated with such protests. Each Owner agrees to reimburse the Association for any costs associated with such protests as related to that Owner's Unit.

4.7 Owner's Rights with Respect to Interiors. Each Owner shall have the exclusive right to maintain, finish, refinish, and decorate the interior surfaces of the walls, floors, ceilings, and doors (including door frames and door trim) forming and within the interior boundaries of the Owner's Unit, subject to the terms and conditions of the Condominium Documents, including without limitation Section 7 of this Declaration.

SECTION 5 EASEMENTS

5.1 Easements for Encroachments. If any part of the Common Area encroaches or shall hereafter encroach upon a Unit or Units, an easement for such encroachment and for the maintenance of the same shall and does exist. If any part of a Unit encroaches or shall hereafter encroach upon the Common Area, or upon an adjoining Unit or Units, an easement for such encroachment and for the maintenance of the same shall and does exist. Such encroachments shall not be considered encumbrances on the Common Area or the Units. Encroachments referred to herein include, but are not limited to encroachments caused by settling, rising or shifting of the earth under the Buildings, or by changes in position caused by repair or reconstruction of the

Buildings or any part thereof. Notwithstanding the foregoing, no Owner shall be entitled to deliberately and intentionally encroach on the Common Area without the prior written approval of the Board, or on any other Unit without the prior written consent of the Owner of the other Unit.

5.2 Easements of Access for Repair, Maintenance, and Emergencies. Portions of the Common Area and/or easement areas granted pursuant to this Declaration or any other Condominium Document, are or may be located within the Units or may be conveniently accessible only through the Units. The Owners have the irrevocable right, to be exercised by the Association as their agent, of access to each Unit and to all Common Area from time to time during such reasonable hours as may be necessary and established by the Board for the construction, installation, inspection, operation, maintenance, repair or replacement of any of the Common Area located therein or accessible therefrom, or the construction, installation, inspection, operation, maintenance, repair or replacement of any improvements and facilities located within the Common Area, or for making repairs, maintenance and emergencies therein necessary to prevent damage to the Common Area or to another Unit or Units or to correct a violation of any covenant, condition or restriction of the Declaration when, after reasonable efforts by the Association, the Owner fails to do so. The Association shall also have such right of access independent of any agency relationship. Except in the case of an emergency, the Association shall notify Owners a minimum of 48 hours prior to accessing a Unit under the easement granted hereunder. Damage to the interior of any part of a Unit or Units resulting from the construction, installation, inspection, operation, maintenance, repair, emergency repair or replacement of any of the Common Area or as a result of emergency repairs within another Unit at the insistence of the Association or of Owners shall be an expense of all of the Owners; provided, however, that if such damage is the result of the negligence of an Owner or such Owner's Lessees, invitees, or licensees, then such Owner shall be financially responsible for all of such damage. Such damage shall be repaired and the Unit shall be restored substantially to the same condition as existed prior to damage. Amounts owing by Owners pursuant hereto shall be collected by the Association as an Assessment pursuant to Section 9 herein.

5.3 Owner's Right to Support. Each Owner shall have the right to the horizontal and lateral support of such Owner's Condominium, and such rights shall be appurtenant to and pass with the title to each Condominium.

5.4 Ingress/Egress Easement. Each Owner shall have the right to ingress and egress over, upon, and across the Common Area (as shown in Exhibit B) necessary for access to that Owner's Condominium and such rights shall be appurtenant to and pass with the title to each Condominium. In exercising the rights granted in this Section, each Owner agrees to use reasonable efforts to avoid interference with the access to other Condominiums.

5.5 Association's Right to Use of Common Area. The Association shall have the right to make such use of the Common Area as may be necessary or appropriate to perform the duties and functions which it is obligated or permitted to perform pursuant to this Declaration or other Condominium Documents, including the right to grant utility easements, alter the Common Areas, and to construct and maintain maintenance and storage facilities in the Common Area for use by the Association.

5.6 Declarant's Right Incident to Construction. Declarant and Persons it shall select, shall have the express and unconditional right to ingress and egress over, upon and across the Project, including Common Area and all Units, the right to store materials thereon and to make other use thereof as may be reasonably necessary or incident to completion of development and construction of the Buildings and Units shown on the Plat or any amendment thereto and the completion of all Units for use and occupancy; provided, however, that no such rights shall be exercised by Declarant in such a way as to unreasonably interfere with the occupancy, use, enjoyment, or access to an Owner's Condominium by that Owner or such Owner's Lessees, invitees, or licensees.

5.7 Emergency Easement. A general easement is granted to all police, sheriff, fire protection, ambulance, and all other similar emergency agencies or persons to enter upon all streets and property within the Project in the proper performance of their duties. The easement granted herein is recognized to be a condition of platting the Property imposed by Valley County. Such easement shall not be dissolved or altered in any material way that would prevent its beneficial use for its intended purpose without the written consent of Valley County.

5.8 Recorded Easements. The Property, and all portions thereof, shall be subject to all easements shown on any recorded Plat affecting the Property, or any portion thereof, and to any other easements of record or of use, now existing or hereafter created, including without limitation any storm drainage easements, street light easements, sanitary sewer easements, or any other public utility easement shown on the Plat.

5.9 Easements for Annual Inspection. Any Person authorized by the Board shall have the right of access to all Units on an annual basis for the purpose of inspecting such Units for compliance with the terms and conditions of the Condominium Documents. The Association shall notify Owners a minimum of 48 hours prior to accessing a Unit under the easement granted hereunder.

5.10 Easements Deemed Created. All conveyances of Condominiums hereafter made, whether by Declarant or otherwise, shall be construed to grant and reserve such reciprocal easements as shall give effect to Sections 5.1 through 5.11. even though no specific reference to such easements or to those Sections appear in any such conveyance.

SECTION 6 DESCRIPTION OF CONDOMINIUM

Every contract for the sale of a Condominium and every other instrument affecting title to such Condominium shall describe that Condominium by the Unit shown on the Plat with appropriate reference to the Plat and to this Declaration, as each appears on the records of Valley County, Idaho, in the following manner:

> Unit _____ as shown on the final plat of Alpine Storage Condominiums, recorded in the real property records of Valley County, Idaho, on_____, 2024, as Instrument No. _____, Book _____ of Plats at Pages_____through _____, as the same may be amended or supplemented from time to time, and as defined in the Condominium Declaration for Alpine Storage

Condominiums, recorded in the real property records of Valley County, Idaho, as the same may be amended or supplement from time to time.

Such description shall be construed to describe the separate ownership interest in the identified Unit, together with the appurtenant undivided tenant-in-common interest in the Common Area, and to incorporate all rights incident to ownership of a Condominium interest and all the limitations on such ownership as described in the Condominium Documents or any amendments or supplements thereto, whether or not so specified in the instrument.

SECTION 7 USES AND REGULATION OF USES

7.1 Storage Purposes. The Units shall be used solely for the passive activity of storing personal property in accordance with the terms of this Declaration and Applicable Law. No portion of a Unit shall be used at any time for any wholesale or retail activity; provided, however, an Owner may lease its Unit to a third party to be used by the third party for the passive activity of storing personal property. It is the explicit purpose of the Project that the Units shall be used and maintained as a first-class storage facility for the mutual benefit of each of the Owners.

7.2 Permissible Uses. The following are deemed permissible uses of Units to the extent performed in conjunction with the passive activity of storage:

7.2.1 Maintenance. An Owner or its Lessee engaging in routine maintenance on any boat, automobile, truck, recreational vehicle, other vehicle and/or other equipment which is stored within the Unit; provided, however, that no such routine maintenance may be engaged in for pecuniary benefit. No such routine maintenance shall be conducted outside the Unit and all waste generated by such routine maintenance, including but not limited to gasoline, oil, other petroleum products and byproducts, anti-freeze, petroleum cleaning products, cleaning rags and containers, shall be fully removed from the Unit and the Project at the end of each and every routine maintenance session.

7.2.2 Inventory Turnover and Assessment. Any Owner or its Lessee may utilize the Unit for the storage of any permissible item of inventory and/or supplies used in a lawful trade or business, may add to or withdraw from storage such inventory and/or supplies, or any part thereof, as and when required, and may take count of such inventory and/or supplies at all such times as deemed necessary by such Owner or Lessee.

7.2.3 Business and Personal Records. An Owner or its Lessee may utilize the Unit for the storage of any business and personal records, and any Owner or its Lessee may conduct such reviews of such records as deemed necessary by such Owner or Lessee.

7.3 Prohibited Uses. The following uses are expressly prohibited:

7.3.1 Retail or Wholesale Outlet. No Owner or Lessee shall use any Unit as a retail or wholesale outlet for the sale of goods or services to any third party, and no Owner or Lessee may permit potential customers of such goods or services to enter the Project for such purpose. Notwithstanding the foregoing, nothing herein shall prohibit the owner of an item of

personal property held for personal use, such as a boat, automobile, truck, recreational vehicle or other personal vehicle from showing such item for sale while in storage in a Unit on a casual basis only.

7.3.2 Manufacture or Assembly. No Owner or Lessee shall utilize any Unit as a place of manufacture or assembly of any item or combination of items, however characterized or conceived, for sale or resale to third parties.

7.3.3 No Business Activities. No Owner or Lessee shall utilize any Unit as a place of business, whether primary or secondary, for the conducting of repair or maintenance activities and/or services of any sort, however characterized or conceived, for pecuniary benefit.

7.3.4 Noxious Activity. No Owner or Lessee shall use any Unit so as to cause an unacceptable level of noise, vibration, odor, garbage or other waste, the precise levels of which shall be determined by the Board, and which may be more restrictive than levels established by any Applicable Law.

7.3.5 Hazardous Substances. No Owner or Lessee shall cause or permit any Hazardous Substance (as defined below) to be used, stored, generated, released, handled or disposed of on or in any Unit in violation of Applicable Law, or otherwise in violation of any rules relating to the same as adopted by the Board from time to time, which rules maybe more restrictive than those established by any Applicable Law; provided, however, that any fuels or other liquids contained within any boat, mobile home, motor home, automobile, truck, recreational vehicle, other vehicle and/or other equipment that is stored within a Unit shall be deemed permitted even if so defined, so long as such fuels or other liquids are necessary for the operation thereof and are lawfully contained within such item of personal property for such purpose. As used herein, the term "Hazardous Substance" shall include all flammable materials, explosives, radioactive materials, hazardous wastes, toxic substances, or other hazardous materials, including without limitation, substances defined as "**hazardous substances**," "**hazardous materials**," "**hazardous wastes**" or "**toxic substances**" in any Applicable Law or in any guideline pertaining to health, industrial hygiene or the environment, whether now or hereinafter promulgated.

7.3.6 High Piled Combustible Storage. No Owner or Lessee shall store combustible materials in violation of Applicable Law or otherwise in violation of any rules relating to the same as adopted by the Board from time to time, which rules may be more restrictive than those established by any Applicable Law. Without limiting the generality of, and subject to, the foregoing, no Owner or Lessee shall store combustible materials in closely packed piles or on pallets or on racks or on shelves where the top of that high piled storage is greater than 12 feet in total height, and if the high piled combustible materials also include certain high-hazard commodities, such as rubber tires, Group A plastics, flammable liquids, idle pallets, and similar products, then that high piled storage use shall be limited to six feet of total high piled height.

7.3.7 Residential Use. No Owner or Lessee shall use a Unit, or permit another to use such Unit, for residential purposes, permanent or temporary.

7.3.8 Animals. No Owner or any Lessee shall use any Unit to shelter any animal, whether or not that animal is a pet, and whether or not such shelter is permanent or

temporary. “Shelter” shall mean any event where an animal is left in a Unit unattended for any period.

7.3.9 Leash Regulation. Animals belonging to an Owner, Lessee, or their guests must be kept on a leash and under the control of the animal’s owner. All animal owners must pick up animal waste and dispose of the same, either by depositing the same in the outdoor Common Area trash container or by removing the same from the Project.

7.4 Unit Rental. The Owner of a Unit, including Declarant, a mortgagee in possession, or any successor in interest thereto, may lease or rent a Unit for a term of not less than 30 days, subject to the limitation that any such lease or rental agreement shall be in writing and by its terms shall provide that such lease or rental agreement and the Lessee thereunder are subject, in all respects, to the Condominium Documents. Any such lease or rental agreement shall provide that any failure by the Lessee to comply with the terms contained in said documents shall be a default under the terms of said lease or rental agreement and shall be a basis for termination thereof. The Association shall approve the form of all lease and rental agreements to ensure compliance with the provisions hereof. Each Owner shall notify the Association in writing within five business days following the execution of any lease or rental agreement covering a Unit, of the identity, telephone numbers and addresses of each Lessee and of the duration of the lease/rental agreement. The Owner of a Unit so leased or rented shall at all times be responsible for and liable to the Association and other Owners for all acts and omissions of the Lessee, including but not limited to fines and Assessments levied against the Unit and its Owner based on the Lessee’s use violations of the Condominium Documents.

7.5 Vehicle Parking. Parking or storing any motor vehicle at any location within the Property, outside of the boundaries of a Unit or a designated parking space, is strictly prohibited. No motor vehicle shall obstruct in any fashion the free passage of vehicles and/or pedestrians to and from every other Unit. Owners, and their Lessee’s and guests, may park their motor vehicles within their respective Units at any time without limitation. Any motor vehicle parked at any location within the Property other than inside a Unit shall be operable. No motor vehicle shall be stored in the Common Area. A motor vehicle (including a boat, motorcycle, snowmobile and all forms of recreational equipment) is “stored” when it is parked at any location within the Property, outside the boundaries of a Unit, for more than two consecutive hours, unless it is parked directly in front of the motor vehicle’s Owner’s Unit, for allowed Unit uses, and in a manner that does not otherwise encumber or limit other Owners’ access to their respective Units and to general ingress and egress to the Property. The Board may require the immediate removal of any inoperable or improperly stored vehicle left outside of a Unit and/or any other item of personal property improperly stored within the Property, whether or not contained within a Unit. If the same is not removed by the responsible Owner, the Board may cause removal thereof at the risk and expense of the Owner thereof.

7.6 Driving Areas and Walkways. Driving areas, walkways and corridors within the Common Elements shall be used exclusively for normal transit, other than during the process of entering or leaving a Unit, and no obstructions shall be placed within the Common Elements except by express written consent of the Association.

7.7 **Signs**. No sign of any kind shall be displayed from the exterior of any Unit or from the Common Area without the prior written consent of the Board.

7.8 **Exterior Appearance**. No Owner shall be permitted to alter, in any fashion, the Common Area, including the exterior finish of the exterior surfaces of the walls surrounding a Unit, and exterior surfaces of the doors, which are part of the Common Area.

7.9 **Trash Collection**. All trash and trash collection from a Unit shall be the responsibility of the Unit's Owner, and no trash shall be permitted to be stored inside or outside of the Unit(s). A common trash collection bin that will be provided by Declarant or by the Association, and each Owner shall be solely responsible for the trash produced from the use of the Owner's Unit, which trash shall be promptly removed by the Owner.

7.10 **Units for Sale or Lease and Realtor Signage**. All "Unit For Sale or Lease" signage placement requests shall be approved, prior to placement on the Property, by the Board. The Board shall designate the landscaping areas for "Unit for Sale or Lease" sign placement locations. Each Owner may request one sign per "Unit For Sale or Lease" to be placed in the designated area within the Common Area. Approved "Unit For Sale or Lease" signs shall not exceed 2'(W) by 4'6"(H) and shall be constructed of a metal material in a workmanship like manner, and be in good physical and aesthetic condition. The approved signage shall demonstrate "Unit For Sale or Lease." The use of mobile signs or portable signs; balloons, flags, wiggle flags or kite style signs, inflatable signs, signs which produce odor, sound, smoke, flame or other emissions, signs which imitate or simulate official signs, or which use yellow or red blinking or intermittent lights resembling danger or warning signals; signs with lights; roof signs and billboards are prohibited. The approved "Unit For Sale or Lease" signage shall be removed by the Owner within 72 hours after the sale or the cancellation or termination thereof. Liability for damage and/or destruction of the Common Area by the signage, installation, or removal shall be the sole responsibility of the Owner. Reasonable efforts shall be made by the Board to notify an Owner of a sign that fails to comply with the terms contained herein prior to the removal of the signage. The Board reserves the right to have any unauthorized or non-conforming signage removed, without notification, at the Owner's sole and separate cost. It shall be the Owner's sole responsibility to ensure that, prior to placement, that all approved "Unit For Sale or Lease" signage conforms to Applicable Law.

7.11 **Maintenance of Interiors and Limited Common Area**. Each Owner shall keep such Owner's Unit, including, without limitation, interior walls, floors, ceilings, doors, and permanent fixtures and appurtenances thereto, in a clean, sanitary, and attractive condition, and good state of operating condition and repair and shall keep any equipment exclusively serving the Owner's Unit in a good state of operating condition and repair and free from any odor and/or mold. Each Owner shall keep the Limited Common Area designated for the exclusive use of such Owner in connection with the Unit, if any, in a clean, sanitary, and attractive condition, and good state of operating condition and repair, including removal of snow and ice on Limited Common Area. Each Owner shall notify the Association of any unsafe condition existing in, on, or around the Limited Common Area. In addition, nothing unsightly, in the reasonable opinion of the Board, shall be kept on any exterior Limited Common Area.

7.12 Prohibition of Damage and Certain Activities.

7.12.1 No damage to, or waste of, the Common Area or any part thereof shall be committed by any Owner or such Owner's Lessees, invitees, or licensees, and each Owner shall indemnify and hold the Association and the other Owners harmless against all loss resulting from any such damage or waste caused by such Owner or such Owner's Lessees, invitees, or licensees.

7.12.2 No rubbish or debris of any kind shall be placed or permitted to accumulate anywhere upon the Project or any portion thereof, except in such containers and other areas designated for such purpose by Declarant or the Board, and no odor shall be permitted to arise from any portion of the Project so as to render, in the reasonable opinion of the Board, the Project or any portion thereof unsanitary, offensive, or detrimental to the Project, or to any other property in the vicinity of the Project. No fires and no obstructions of pedestrian walkways shall be permitted to exist at the Project. No noise, no unsightliness, and no other nuisance shall be permitted to exist or operate upon any portion of the Project in violation of Applicable Law or so as to be, in the reasonable opinion of the Board, offensive or detrimental to the Project or to its Owners or to other property in the vicinity Project. Without limiting the generality of any of the foregoing, no Owner shall use or install or permit to be used or installed any whistles, bells, or other sound devices, or flashing lights or search lights within the Project without the Board's approval.

7.12.3 Owners shall not use or suffer or permit any Person or Persons to use any Condominium or any part thereof for any use or purpose in violation of Applicable Law.

7.12.4 Owners shall not use or suffer or permit any Person or Persons to use any Condominium or any portion thereof, for any use or purpose in violation of any of the terms and conditions of this Declaration or other Condominium Documents.

7.12.5 Owners shall not do or permit anything to be done in or about any Unit or in the Common area, nor bring or keep anything therein, which will in any way result in the cancellation of or increase in the rate of the insurance on the Project or any part thereof over what the Association, but for such activity, would pay, without the prior written consent of the Board or which would be in violation of Applicable Law. Any Owner taking or permitting any such action, which has been approved by the Board and results in an increased rate of insurance on the Project or any part thereof, shall be solely responsible for the payment of the resulting difference in such increased premium.

7.12.6 Owners shall not do or permit anything to be done in or about the Unit or Common Area that will in any way obstruct or interfere with the rights of other Owners or Lessees in the Buildings, create undue noise and disruption, or injure or annoy them or use or allow the Unit to be used for an unlawful or objectionable purpose, nor shall Owner cause, maintain or permit any nuisance in, on, or about the Buildings.

7.13 No Hazardous Activities. No activities shall be conducted on the Project, that are or might be unsafe or hazardous to any Person or property including, without limitation, any fires and/or the discharge of firearms.

7.14 Energy Devices, Outside. No energy production devices or generators of any kind (including without limitation solar energy devices and windmills), shall be constructed or maintained on or in any portion of the Common Area without the prior written approval of the Board. In the event that the addition or use of such a device is approved by the Board, it (and any related equipment) must be installed and/or screened in the manner approved by the Board.

7.15 Construction and Structural Alterations. It is the concurrent responsibility of Declarant, the Association, and each Owner to ensure the continuing structural integrity of each of the Buildings. The construction characteristics of the Buildings do not permit the addition of loads, except as are specifically engineered and approved in accordance with the provisions of the Uniform Building Code. It is also anticipated, however, that an Owner may elect, at the Owner's sole and separate cost, to erect storage lofts within the Owner's Unit. Accordingly, it shall be permissible for an Owner to make alterations to the interior of such Owner's Unit that do not adversely affect the continuing structural integrity of any of the Buildings; provided, however, that such alterations shall be absolutely subject to the limitation that no alteration shall be allowed which causes an adverse effect upon the Common Area or the structural integrity of any portion of any Building. Accordingly, the Board shall provide to each Owner specifications concerning permissible interior alterations to Units, and no such alterations shall be made except in compliance with such specifications. Each Owner is required to notify the Board of all improvements by the Owner to such Owner's Unit that cost more than $5,500.00. Furthermore, any Owner who makes or permits alterations to such Owner's Unit shall be liable for any damage caused as a consequence thereof to any other Unit or to any Common Area.

7.16 No Smoking. The Project is designated as "smoke free," and no smoking of any kind is allowed at the Project, including without limitation "vapor" smoking. Notwithstanding the foregoing, the Board may from time to time designate certain outdoor areas of the Project as "Permitted Smoking Areas," in which event smoking shall be allowed only in such designated areas. Neither Declarant nor the Association guarantees a smoke free environment at the Project or any portion thereof.

7.17 Right to Enjoy and Use Units. Each Owner shall be entitled to use and enjoy the Owner's Unit for its intended purpose and nothing herein is intended to impose or grant the authority to impose any restrictions, limitations or prohibitions which would deprive an Owner of the reasonable use and enjoyment of the Owner's Unit. Notwithstanding the foregoing, no Owner shall be entitled to use the Owner's Unit for any uses not allowed under the Valley County Municipal Code or otherwise limited by this Declaration or any other Condominium Documents.

SECTION 8 ALPINE STORAGE CONDOMINIUM OWNERS ASSOCIATION

8.1 Creation and Designation of Association. Declarant has incorporated the Association as a nonprofit corporation under the laws of the State of Idaho, and Declarant designates the Association as the "management body" of the Project in accordance with the Condominium Act. The Association is charged with the duties and vested with the powers prescribed by law and set forth in its Articles, Bylaws, this Declaration (as it relates to the Association's management of the Project), and the other Condominium Documents, as each may be amended and/or supplemented from time to time according to their respective terms. Neither

the Articles nor the Bylaws shall, for any reason, be amended or otherwise changed or interpreted so as to conflict with this Declaration.

8.2 Membership. Every Owner of a Condominium is a Member of the Association and has one membership for each Condominium in the Project owned by such Owner.

8.2.1 If the Owner of a Condominium shall be more than one Person, all such Persons shall have a membership in the Association and be deemed Members, but the voting rights in the Association attributable to that Condominium may not be split and shall be exercised by one representative selected by such Persons as they, among themselves, may determine. In the event such Persons are unable to agree among themselves on any matter put to a vote as to how the vote shall be cast, such Persons shall not be entitled to vote on the matter in question. If only one such Person casts a vote, it will thereafter be conclusively presumed for all purposes that such Person was acting with the authority and consent of all other co-Owners of such Condominium. To this end, only one vote is allocated to each Condominium, regardless of the number of Persons that hold an ownership interest in such Condominium. In all events, each Member's voting rights are subject to Declarant's rights during the Declarant Control Period.

8.2.2 A membership in the Association shall be appurtenant to and inseparable from the Condominium owned by such Member. A membership in the Association shall not be assigned, transferred, pledged, or alienated in any way except upon the transfer of title to the Condominium and then only to the transferee of title to said Condominium. Any attempt to make a prohibited transfer of a membership shall be void and shall not be reflected on the books of the Association, except the rights of membership may be assigned to a Mortgagee as further security for a loan secured by a lien on a Condominium.

8.3 Member Meetings. The Association shall hold an annual meeting of the members and periodic special meetings of the members as set forth in the Bylaws.

8.4 Voting. Except as otherwise provided herein, and as more fully set forth in the Bylaws, all matters submitted to a vote of the Members shall be determined, made, approved, or authorized upon the affirmative vote of a majority of the Members present at an annual or special meeting of the Association at which a quorum is present. During the Declarant Control Period, all matters coming before the Association for vote shall be decided by the Declarant.

8.5 Board of Directors. The business and affairs of the Association are managed by the Board. The Board will consist of not less than three directors and no more than five directors. Directors need not be Owners. During the Declarant Control Period, Declarant has the exclusive right to fill vacancies and to appoint, remove, and replace directors at any time and from time-to-time in Declarant's sole discretion. After the Declarant Control Period, the Members have the right to elect, remove, and replace directors as provided in the Bylaws. After the Declarant Control Period, any vacancy on the Board shall be filled as provided in the Bylaws.

8.6 Delegation of Authority. The Board may at any time and from time-to-time delegate all or any portion of its powers and duties to committees, officers, employees, or to any Person to act as manager, including the Management Company.

8.7 Powers of the Association. The Association shall have all the powers of a nonprofit corporation incorporated under the laws of the State of Idaho and all the powers and duties set forth in the Condominium Documents, including the power to perform any and all acts which may be necessary to, proper for, or incidental to the foregoing powers. The powers of the Association include, by way of illustration and not limitation:

8.7.1 Assessments. The power and authority to levy Assessments on the Owners of Condominiums and to enforce payment of such Assessments, including the power and authority to establish and fund via Assessments such operating and capital reserves as the Board deems necessary or prudent.

8.7.2 Right of Enforcement. The power and authority at any time and from time-to-time, on its own behalf or on behalf of any consenting Owners, to take any action, including any legal action, to prevent, restrain, enjoin, enforce, or remedy any breach or threatened breach of the Condominium Documents. The power of enforcement includes:

8.7.2.1 The right to remove, alter, rebuild, or restore any improvements constructed, reconstructed, refinished, added, altered, or maintained in violation of the Condominium Documents. If such improvements are in a Unit, the Board must first provide the Owner thereof with a notice specifying the default and a reasonable period (no less than 10 days and not to exceed 30 days) to cure, and the Owner of the improvements must immediately reimburse the Association for all expenses incurred with such removal.

8.7.2.2 The right to enforce the obligations of the Owners to pay each Assessment or charge provided for in the Condominium Documents.

8.7.2.3 The right to perform any duty or obligation of an Owner under the Condominium Documents if such duty or obligation is not timely performed by such Owner. In such event, the defaulting Owner must immediately reimburse the Association for all costs reasonably incurred by the Association in performing such duty or obligation. Except in the event of an emergency, the Association must provide the defaulting Owner with a notice specifying the default and a reasonable period (no less than 10 days and not to exceed 30 days) to cure prior to exercising its power and authority hereunder.

8.7.2.4 The right to authorize variances from the requirements of this Declaration when required by applicable law or when needed to prevent the imposition of an undue hardship on an Owner that would be inequitable for such Owner to bear. The granting of a variance does not waive any element of the Declaration for any purpose except as to the Condominium and the particular provision covered by the variance. Approval of a variance does not affect the Owner's obligation to comply with the other elements of this Declaration or Applicable Law.

8.7.3 Association Rules. The power and authority to adopt, amend, and repeal the Association Rules as the Board deems reasonable and appropriate to govern the Project, including rules and regulations regarding: (a) the use of the Common Area; and (b) procedures in the conduct of business and affairs of the Association. Except when inconsistent with this Declaration, the Association Rules have the same force and effect as if they were set forth in and

were made a part of this Declaration. A copy of the Association Rules as they may from time to time be adopted, amended, or repealed, shall be mailed or otherwise delivered to each Owner.

8.7.4 Emergency Powers. The power and authority to enter upon any Unit as necessary in connection with any maintenance or construction for which it is responsible, or when necessitated by violation of the Declaration or other Condominium Documents, or in the event of any emergency involving potential danger to life or property and the power to take corrective action. Such entry shall be made with as little inconvenience to the Owners as practicable and any damage caused thereby shall be repaired by the Association, except as otherwise provided herein.

8.7.5 Common Area. The power and authority to manage, operate, maintain, repair, and replace the Common Area for the benefit of the Project and the Owners, and the power and authority to construct, install, maintain, repair, replace, and operate any improvements in the Common Area, any public right-of-way serving the Project or any other location deemed by the Board to benefit the Project, including any fences, signs or other improvements at Project entrances or otherwise in the vicinity of the Project, and any berms, retaining walls, fences, and other amenities within or abutting any Common Area.

8.7.6 Licenses, Easements and Rights-of-Way. The power to grant and convey to any third party such licenses, easements, and rights-of-way in, on or under the Common Area as may be necessary or appropriate for the orderly maintenance, preservation, and enjoyment of the Project, and/or for the preservation of health, safety, convenience, and welfare of the Owners. The foregoing power includes, without limitation, the power to grant and convey to such third parties' licenses, easements, and rights-of-way for the purpose of constructing, erecting, operating, or maintaining any of the following:

8.7.6.1 Lines, cables, wires, conduits, or other devices for the transmission of electricity, heating, power, telephone, television and data, other utility services and, meters and other facilities associated with the foregoing;

8.7.6.2 Sewers, storm drains, water drains and pipes, water systems, sprinkling systems, water, heating and gas lines or pipes; and

8.7.6.3 Cross parking easements, sidewalk abutments, drive lanes, parking areas, curb cuts, landscaping abutting common areas, public and private streets or land conveyed for any public or quasi-public purpose.

8.7.7 Property for Common Use. The power and authority to acquire and hold for the use and benefit of all of the Owners, or for the benefit of only those Owners within a particular Condominium, tangible and intangible personal property and real property and may dispose of the same by sale or otherwise, and the beneficial interest in any such property shall be deemed to be owned by the Owners in the same proportion as their respective interest in the Common Area.

8.7.8 Amenity Agreements. The power and authority to enter into any lease, license, use, or other agreement as the Board deems proper or convenient to secure the use of offsite amenities or facilities for the benefit of the Project.

8.7.9 Inspection. The power and authority to enter a Unit for the purpose of conducting regular maintenance inspections.

8.7.10 Taxes. The power and authority to pay all real and personal property taxes and assessments (if any) levied against the Common Area, the Association, and any other property owned by the Association. In addition, the Association must pay all taxes, including income, revenue, corporate, or other taxes (if any) levied against the Association.

8.7.11 Entitlement Obligations. The power and authority to fulfill any duties imposed by any governmental or other quasi-governmental agencies as part of the entitlements for the development of Project, including any requirements or obligations identified in such entitlements as the responsibility of community association or homeowners' association or management body, such as plat notes, development agreements, or conditions of approval.

8.7.12 Financing. The power and authority to enter into any agreements necessary or convenient to allow Owners to take full advantage of, or secure the full availability of, any financing programs offered.

8.7.13 Estoppel Certificates. The power and authority to execute a written statement stating: (a) whether, to the knowledge of the Association, a particular Owner or Owner's Condominium is in default of this Declaration or other Condominium Documents; (b) the dates to which any Assessments have been paid by a particular Owner; and (c) such other matters as the Board deems reasonable. Any such certificate may be relied upon by a bona-fide prospective purchaser or Mortgagee of such Owner's Condominium, but only to the extent such prospective purchaser or Mortgagee has no knowledge to the contrary. The Association may charge a reasonable fee for such statements.

8.7.14 Improvements in Public Right-of-Way. The power and authority to enter into license and easement agreements with the Valley County Road Department (or assume the duties and obligations under any such license agreement entered into by Declarant) to install, maintain, improve, irrigate, trim, repair, and replace improvements and landscaping in the public rights-of- way (including sidewalk easements and planter strips).

8.7.15 Implied Rights. Notwithstanding the foregoing, the Association may exercise any other right or privilege given to it expressly by this Declaration or by Applicable Law, and every other right or privilege reasonable to be implied from the existence of any right or privilege given to it herein or reasonably necessary to effectuate any such right or privilege. Such rights shall include without limitation the right to acquire water meters for each Unit.

8.7.16 The Power to Levy Fines. The power to impose reasonable monetary fines which shall constitute a lien upon the Unit owned or occupied by the Owner, Lessee, or other Person determined by the Board to be in violation of the Condominium Documents (individually, a "Violation"). Provided, however, the Association shall not impose a fine on an Owner for a Violation unless: (i) the Board votes to impose the fine at any regular or special meeting of the Board or the Association (individually, a "Levy Meeting"); (ii) such Owner is provided at least 30 days advance written notice of the Levy Meeting by personal service or certified mail at the last known address of such Owner as shown in the records of the Association; and (iii) such Owner is

given a reasonable opportunity to respond to the Violation during the Levy Meeting. Provided further, the Association shall not impose a fine on an Owner if such Owner, prior to the Levy Meeting, begins resolving the Violation and continues to address the Violation in good faith until the Violation is fully resolved (the "**Remedial Period**"). For purposes of this Section, the phrase "address the violation in good faith until the Violation is fully resolved" means the Owner must resolve the Violation within 30 calendar days of the Notice; provided, however, if the nature of the Violation is such that more than 30 calendar days are required for its resolution, then the Owner must diligently prosecute the same to completion within 60 calendar days. All such fines shall be deemed to be a part of the Assessments to which the Owner's Unit is subject under this Declaration. In all events, no portion of such fines may be used to increase the compensation to the Board or agent thereof.

8.7.17 Use of Association Powers. Notwithstanding the foregoing, the Association shall not take any action that would impair an Owner's right to enjoy and use his/her Unit as set forth herein.

8.8 Duties of the Association. In addition to the power delegated to it by the Condominium Documents, the Association or its agents shall have the obligation to conduct all business affairs of the Association and to perform, without limitation, each of the following duties:

8.8.1 Operation and Maintenance of Common Area. Operate, maintain and otherwise manage or provide for the operation, maintenance and management of the Common Area and all improvements thereon, including parking areas, drive lanes, landscaping and irrigation system, common seepage beds, and the exterior of the Buildings, including the repair and replacement of property damaged or destroyed by casualty loss and all other property acquired by the Association, and shall maintain the same in a good, clean, attractive and sanitary condition, order and repair.

8.8.2 Taxes and Assessments. Pay all real and personal property taxes and assessments separately levied against the Common Area, the Association, or property owned by the Association and all such taxes shall be paid or a bond insuring payment posted prior to the sale or the disposition of any property to satisfy the payment of such taxes. In addition, the Association shall pay all other taxes, federal, state or local, including income or corporate taxes levied against the Association in the event that the Association is denied the status of a tax-exempt corporation.

8.8.3 Water and Other Utilities. Acquire, provide and/or pay for water, storm drainage system maintenance, sewer, electric systems, garbage, disposal, refuse and rubbish collection and other necessary services for the Common Area and Units, except to the extent separately billed or separately metered, as may be determined by the Board from time to time in its discretion.

8.8.4 Insurance. Obtain, from reputable insurance companies authorized to do business in the State of Idaho and maintain in effect the policies of insurance described in Section 13.

8.8.5 Maintenance of Exteriors and Improvements. Maintain and repair the exterior surfaces of the Buildings and improvements in the Project. The exterior maintenance shall

include painting, staining, repairing, replacing, and caring for all exterior surfaces including roofs and exterior portions of doors as necessary to maintain them in good condition.

8.8.6 Inspection and Maintenance Guidelines. The Board shall adopt inspection and maintenance guidelines for the periodic inspection and maintenance of the Common Area, including, without limitation, the sewer system and drainage facilities. The Board periodically, and at least once every two years, shall review and update the inspection and maintenance guidelines. The Board shall take all appropriate steps to implement and comply with the inspection and maintenance guidelines and shall keep records of such implementation and compliance.

8.8.7 Drainage Facilities. Operate and maintain the storm drainage area, as depicted on the Plat. Notwithstanding anything to the contrary, no buildings or other similar improvements shall be constructed within the storm drainage area that would materially interfere with the Property's drainage system.

8.8.8 Maintenance of Records and Right of Inspection. The Association shall keep such records of its business and affairs as is customary for community or homeowner associations, including a membership register, accounting records, financial statements, operating budgets, balance sheets, and minutes of meetings of the Board and committees. Such records shall be available at the Association's regular offices for inspection and copying by any Owner at such Owner's expense. The Board may establish reasonable rules with respect to: (a) notice to be given to the custodians of the records by persons desiring to make the inspection; (b) hours and days of the week when such an inspection may be made; and (c) payment of the cost of reproducing copies of documents requested pursuant to this Section 8.8.8. The Association's obligations hereunder may be fulfilled by making the records available to an Owner electronically, including delivery by electronic mail or the posting of such records on a website.

8.9 Immunity and Indemnification. Each Owner understands and agrees that Declarant, the Association, and the members, managers, directors, officers, agents, employees, and committee members of any of them (each individually a "**Released Party**") shall be immune from personal liability to such Owner, and such Owner knowingly and voluntarily waives and releases each Released Party, for such Released Party's actions or failure to act with respect to the Condominium Documents to the extent that such acts or failures to act do not constitute gross negligence or willful misconduct on the part of such Released Party. The Association shall indemnify, defend, and hold each Released Party harmless from any action, expense, loss or damage caused by or resulting from such Released Party's actions or failure to act with respect to the Condominium Documents; provided, however, the Association shall not be obligated to indemnify, defend, and hold harmless any Released Party for their own gross negligence or willful misconduct.

8.10 Waiver of Consequential Damages. Declarant and Association shall not be liable to any Owner for, and each Owner releases Declarant and Association from, any form of indirect, special, punitive, exemplary, incidental, consequential, or similar costs, expenses, damages, or losses.

SECTION 9 ASSESSMENTS

9.1 Covenant to Pay Assessments. By acceptance of a deed to any Condominium, each Owner covenants and agrees to pay when due (without deduction, setoff, abatement or counterclaim of any kind whatsoever) all Assessments or charges made against such Owner or such Owner's Condominium pursuant to the Condominium Documents. Assessments against a Condominium shall be a continuing lien on such Condominium until paid, whether or not ownership of such Condominium is transferred. Assessments against a Condominium are also the personal obligation of the Owner of the Condominium when the Assessment becomes due and payable. Such personal obligation shall remain with such Owner regardless of whether such Owner remains the owner of the Condominium. Delinquent Assessments related to a Condominium shall not pass to such Owner's successors in title unless expressly assumed by them. Such Assessments and charges, together with interest, costs and reasonable attorneys' fees, which may be incurred in collecting the same, shall be a charge on the Condominium and shall be a continuing lien upon the Condominium against which each such Assessment or charge is made. The due date, manner and method of payment shall be as set forth in this Declaration or as established by the Board from time to time.

9.2 Rate of Assessment. Except as otherwise provided herein, all Owners shall be responsible for Regular Assessments and Special Assessments levied by the Association in proportion to their percentage ownership interest in the Common Area, as set forth in Exhibit D. Owners shall be responsible for Limited Assessments levied by the Association, as set forth in Section 9.5.

9.3 Regular Assessments.

9.3.1 Purpose of Regular Assessments. The proceeds from Regular Assessments are to be used to pay for all costs and expenses incurred by the Association, including attorneys' fees and other professional fees, for the conduct of its affairs as provided in this Declaration (including without limitation Section 8 hereof) and other Condominium Documents, including without limitation the costs and expenses of construction, improvement, protection, maintenance, repair, management and operation of the Common Area and furnishing utility services, including water, sewer, gas, trash and electricity and other common services to the Common Area, and each Condominium (if not separately metered), insurance, and any deficit remaining from previous periods (collectively the "Expenses"). "Expenses" shall also include and an amount to fund adequate reserves for repairs, replacement, maintenance, and improvement of those elements of the Common Area, or other property of the Association that must be replaced and maintained on a regular basis, and for extraordinary operating expenses, contingent risks or liabilities (such as indemnification and defense expenses), capital repairs, capital replacements, and any other expenses for which the Board, in its reasonable opinion, deems prudent to fund a reserve. If not already separately metered, the Board reserves the right to separately meter utility services provided to each Condominium, and in such event the Owner of the Condominium shall be fully responsible for the costs of providing utilities for the Owner's individual use.

9.3.2 Computation of Allocation for Regular Assessments. Unless otherwise determined by the Board, the Association shall compute and forecast the amount of its Expenses

and Regular Assessments on an annual basis. The computation of Regular Assessments shall take place not less than 30 nor more than 60 days before the beginning of each fiscal year of the Association, unless a change in the Members or other circumstance makes its impracticable to compute the Regular Assessments in that timeframe. In such event, the Owners shall be immediately notified upon completion of such computation. Notwithstanding the foregoing, the computation of Regular Assessments shall be completed in good faith and shall be valid upon completion. The computation of the Regular Assessments for the period from the recordation of this Declaration until the beginning of the next fiscal year shall be reduced by an amount which fairly reflects the fact that such period was less than one year. The Board shall have the exclusive right to approve any Assessment under this Section 9.

Except as provided herein, Regular Assessments shall be levied by the Association against Condominiums in proportion to their percentage ownerships in the Common Area as set forth in Exhibit D. Certain Expenses which exist only for the benefit of or only to serve a single Condominium or group of Condominiums (but not all Condominiums) shall only be levied against the Owners thereof in proportion to their percentage ownerships, as among each other, as set forth in Exhibit D.

9.4 Special Assessments. In the event that the Board shall determine that the Regular Assessment for a given calendar year is or will be inadequate to meet the Expenses of the Association for any reason, including, without limitation, costs of construction, reconstruction, unexpected repairs or replacement of improvements upon the Common Area, attorneys' fees and/or litigation costs, other professional fees, or for any other reason, the Board shall determine the approximate amount necessary to defray such Expenses and levy a Special Assessment for such amount. The Board shall, in its discretion, determine the schedule under which such Special Assessment will be paid. If such Special Assessment shall affect more than one Condominium or group of Condominiums (but not all Condominiums), the Owners of the affected Condominiums shall pay those costs associated solely with their Condominiums in proportion to their percentage ownerships, as among each other, as set forth in Exhibit D, while all Owners shall share such costs associated with the Common Area in proportion to their ownership interests set forth in Exhibit D.

9.5 Limited Assessments. Notwithstanding the above provisions with respect to Regular Assessments and Special Assessments, the Association may levy a Limited Assessment against an Owner: (a) for any fines in accordance with Section 8.7.16. and for fees or charges levied against the Owner under the Condominium Documents; (b) to reimburse the Association for any costs incurred to bring the Owner's Condominium or any improvements therein into compliance with the Condominium Documents; (c) to reimburse the Association for any damages caused by an Owner or such Owner's Lessees, invitees, or licensees to any Common Area or improvements or other property owned or maintained by the Association; and (d) for the cost of providing any goods or services under the Condominium Documents that benefit such Owner or Owner's Condominium, but less than all Owners or all Owners' Condominiums. If such Limited Assessment shall affect more than one Condominium, but not all Condominiums, the Owners of the effected Condominiums shall pay those costs associated solely with their Condominiums in proportion to their percentage ownership, as among each other, while all Owners shall share such costs associated with the Common Area in proportion to their percentage ownership interest set forth in Exhibit D, as applicable.

9.6 Notice and Assessment Due Date. Unless the Board establishes a different schedule for the payment of Regular Assessments, annual installments of the Regular Assessments shall be paid on or before the 1st of February each year. The Board shall, in its reasonable discretion, determine the schedule under which Assessments (other than Regular Assessments) will be paid. If not paid within five days after the due date, a one-time late charge equal to 10% of the Regular Assessment shall be charged to the Owner. Each Assessment, other than a Regular Assessment, shall become delinquent if not paid within 10 days after the date of notice thereof to the Owner. If all or any part of an Assessment is not paid within five days after its due date, then: (a) the delinquent Owner shall pay to the Association a late payment charge equal to 5% of the delinquent amount; and (ii) interest shall accrue on the delinquent amount at the rate of 12% per annum until paid in full. In the event an Owner's payment is returned for any reason, such Owner shall pay to the Association an administrative fee in an amount set by the Board and thereafter the Association shall have the right to require future Assessments due from such Owner to be paid in the form of a cashier's check, certified check, or other form of immediately collectible funds acceptable to the Association in the Board's discretion.

SECTION 10 ENFORCEMENT OF ASSESSMENTS; LIENS

10.1 Right to Enforce. The Association has the right to collect and enforce its Assessments, including any late charges and/or interest accrued thereon pursuant to the provisions hereof. Each Owner shall be deemed to covenant and agree to pay each and every Assessment provided for in this Declaration, including any late charges and/or interest accrued thereon, and agrees to the enforcement of all Assessments in the manner herein specified. In the event an attorney or attorneys are employed for the collection of any Assessment, whether by suit or otherwise, or to enforce compliance with or specific performance of the terms and conditions of this Declaration, each Owner agrees to pay reasonable attorneys' fees and costs, including the costs and expenses for any lien releases, in addition to any other relief or remedy obtained against such Owner. The Board or its authorized representative may enforce the obligations of the Owners to pay such Assessments by commencement and maintenance of a suit at law or in equity, or the Board may exercise the power of foreclosure and sale pursuant to this Section to enforce the liens created pursuant to this Section. A suit to recover a money judgment for an unpaid Assessment shall be maintainable without foreclosing or waiving the lien hereinafter provided.

10.2 Assessment Liens.

10.2.1 Creation. A claim of lien with power of sale on each Condominium is created to secure payment of all Assessments levied against such Condominium pursuant to this Declaration together with interest thereon at the maximum rate permitted by law and all costs of collection that may be paid or incurred by the Association making the Assessment in connection therewith, including reasonable attorneys' fees. All sums assessed in accordance with the provisions of this Declaration shall constitute a lien on such respective Condominium upon recording a notice of assessment with the Valley County Recorder. Such lien shall be prior and superior to all other liens or claims created after the recording of the notice of assessment, except for tax liens for real property taxes on any Condominium and any assessment on any Condominium in favor of any municipal or other governmental assessing body which, by law, would be superior thereto.

10.2.2 Notice of Assessment Default. Upon default of any Owner in the payment of any Assessments issued hereunder, the Association may cause to be recorded in the office of the Valley County Recorder a notice of assessment. The notice shall state the amount of such Assessment and other authorized charges (including the cost of recording such notice), a sufficient description of the Condominium against which the same have been assessed, and the name of the record Owner thereof. Each Assessment shall constitute a separate basis for a notice of assessment, but any number of Assessments may be included within a single notice. Upon payment to the Association of such Assessment and charges in connection therewith or other satisfaction thereof, the Association shall cause to be recorded a further notice stating the satisfaction and the release of the lien thereof. The Association may demand and receive the cost of preparing and recording such release before recording the same.

10.3 Method of Foreclosure. To the extent permitted by law, such lien may be foreclosed by appropriate action in court or by sale by the Association, its attorney or other Person authorized to make the sale. Such sale shall be conducted in accordance with the provisions of the Idaho Code applicable to the exercise of powers of sale in deeds of trust or any other manner permitted by Applicable Law. The Board is authorized to appoint its attorney, any officer or director of the Association, or any title company authorized to do business in Idaho as trustee for the purpose of conducting such power of sale or foreclosure.

10.4 Required Notice. No action may be brought to foreclose the lien created by recordation of the notice of assessment, whether judicially, by power of sale or otherwise, until the expiration of 30 days after a copy of such notice of assessment has been deposited in the United States mail, certified or registered, postage prepaid, to the Owner described in such notice of assessment, and to the Person in possession of such Condominium(s) and a copy thereof is recorded by the Association in the Valley County Recorder's Office.

10.5 No Subordination. The lien for the Assessments provided for herein in connection with a given Condominium shall not be subordinate to the lien of any Mortgage. The sale or transfer of any Condominium shall affect neither the Assessment lien provided for herein, nor the creation thereof by the recordation of a notice of assessment, on account of the Assessment becoming due whether before, on, or after the date of such sale or transfer, nor shall such sale or transfer diminish or defeat the personal obligation of any Owner for delinquent Assessments as provided for in this Declaration.

10.6 Rights of Mortgagees. Notwithstanding any other provision of this Declaration, no amendment of this Declaration shall operate to defeat the rights of a Mortgagee under any Mortgage upon a Condominium made in good faith and for value, and recorded prior to the recordation of such amendment, provided that after the foreclosure of any such Mortgage such Condominium shall remain subject to this Declaration as amended.

10.6.1 If a Mortgagee obtains title to any Condominium by any method permitted under law and/or pursuant to all remedies provided in this Declaration, and/or pursuant to any provisions in the Mortgage, such Mortgagee will not be liable for any such Condominium's unpaid dues or charges which accrue prior to the acquisition of title to such Condominium by such Mortgagee. The liens created upon any Unit under the Condominium Documents and/or the Act

shall be subject and subordinate to and shall not affect the rights of a Mortgagee under any recorded Mortgage made in good faith and for value, except as to any recorded liens for unpaid assessments or other charges that became delinquent before such Mortgage was recorded. Further, upon obtaining title to any such Condominium, such Mortgagee shall have the unrestricted right to exercise any vote as may be attributable to such Condominium in any meeting of the Association or otherwise.

10.6.2 Any encumbrancer holding a lien on a Condominium may pay, but shall not be required to pay, any amounts secured by the lien created pursuant to this Section 10, and upon such payment such encumbrancer shall be subrogated to all rights of the Association with respect to such lien, including priority.

10.7 Declarant Exemption. Declarant is exempt from Assessments as set forth in Section 18.4.

SECTION 11 RIGHTS TO COMMON AREAS

11.1 Use of Common Area. Every Owner shall have a nonexclusive right and easement to use the Common Area (exclusive of Limited Common Area) and an exclusive or semi-exclusive right to use Limited Common Area designated for exclusive or semi-exclusive use by the Owner, which shall be appurtenant to and shall pass with the title to every Condominium, subject to the following provisions:

11.1.1 Assessments. The rights of the Association to levy Assessments as provided herein and the payment by an Owner of all such Assessments;

11.1.2 Voting. The right of the Association to suspend the voting rights and rights to use or interest in any Common Area by an Owner for any period during which any Assessments or charges against such Owner's Condominium remains unpaid;

11.1.3 Dedication or Transfer. The right of the Association to dedicate or transfer all or any part of Common Areas to any public agency, authority, or utility for such purposes and subject to such conditions as may be agreed to by the Members. No dedication or transfer shall be effective unless an instrument is executed and recorded by the Association verifying that such dedication or transfer has been approved by: (i) the vote or written consent of Owners representing a majority of the total voting power in the Association, and (ii) 51% or more of all Mortgagees; and

11.1.4 Association Rules. The right of the Association to establish and enforce such Association Rules as the Association deems proper regarding the Project and use of Common Area.

11.2 Delegation of Right to Use. Any Owner may delegate in accordance with the respective Condominium Documents, such Owner's reasonable right to the use and enjoyment of the Common Area to such Owner's Lessees, invitees, or licensees.

11.3 Damages. To the extent permitted by law, each Owner shall be liable for expenses for corrective action necessitated by violation of the Declaration or Association Rules or for any damage to such Common Area which may be sustained by reason of such Owner's Lessees, employees, occupants, guests, invitees, or licensees. In the case of joint ownership of a Condominium, the liability of such Owners shall be joint and several. The cost of corrective action shall be assessed as an Assessment against the Condominium and may be collected as provided herein for the collection of other Assessments.

SECTION 12 MECHANIC'S LIEN RIGHTS

No labor performed or services or materials furnished with the consent of or at the request of an Owner or such Owner's agent, contractor or subcontractor shall be the basis for the filing of a lien against the Condominium of any other Owner or against any part thereof, or against any other property of any other Owner, unless such other Owner has expressly consented to or requested in writing the performance of such labor or furnishing of such materials or services. Such express written consent shall be deemed to have been given by the Owner of any Condominium in the case of emergency corrective action undertaken by the Association. Labor performed or services or materials furnished for the Property if duly authorized by the Association shall be deemed to be performed or furnished with the express consent of each Owner. Any Owner may remove his/her Condominium from a lien against two or more Condominiums or any part thereof by payment of sums secured by such lien which is attributable to such Owner's Condominium.

SECTION 13 INSURANCE

13.1 Types of Insurance. The Association shall obtain and keep in full force and effect at all times such bonds and insurance as may be required by Applicable Law and such further insurance as the Board deems necessary or prudent, including casualty insurance for any property or improvements owned or maintained by the Association, public liability insurance related to the Association's operations and the use of the Common Area, directors and officers liability coverage. Unless otherwise authorized by the Board, the Association shall procure at least the following insurance policies to the extent such policies are available on commercially reasonable terms:

13.1.1 Casualty Insurance. The Association shall obtain and maintain a "bare walls" insurance on the Buildings and other property owned by the Association in such amounts as shall provide for full replacement thereof, including, but not limited to, those costs associated with rebuilding, design, any required permits, legal fees, and any other fees associated with the replacement of the Buildings, in the event of damage or destruction from the casualty against which such insurance is obtained. Such insurance shall include fire and extended coverage, vandalism, and mischief, and such other risks and hazards against which the Board deems appropriate to provide insurance protection. The Association may comply with the above requirements by the purchase of blanket coverage and may elect such "deductible" provisions as the Board, in its reasonable opinion, deems consistent with good business practice. The Association's policy of casualty insurance does not insure individual Units or the betterments or improvements made thereto (including without limitation cabinets, countertops, sinks, floor coverings, paint, attached

fixtures, utility systems serving only the Unit, and the like) or the personal property or other contents thereof, all of which shall he insured by the Owner pursuant to Section 13.4 hereof.

13.1.2 Commercial General Liability Insurance. The Association shall maintain a policy of commercial general liability insurance covering the activities of the Association, its Board, employees, and agents and have a combined single limit of not less than $2,000,000 per person and per occurrence and property damage liability insurance with a limit of not less than $2,000,000 per accident or occurrence.

13.1.3 Directors' and Officers' Liability Insurance. Full coverage directors' and officers' liability insurance with a limit of at least Two Hundred Fifty Thousand Dollars ($250,000) for the directors and officers of the Association. In addition, the Association shall cause the Management Company to purchase, in such amounts and in such form as the Board shall deem appropriate, coverage against liability on account of the Management Company's dishonesty of employees, officers, and directors, destruction or disappearance of money or securities, and forgery.

13.1.4 Other. The Association may obtain insurance against such other risks, of a similar or dissimilar nature, including errors and omissions insurance for the actions of the Board, as it shall deem appropriate with respect to the Buildings, including any personal property of the Association located thereon.

13.2 Form. Casualty insurance on the Project shall be carried in a form or forms naming the Association as the insured as trustee for the Owners, which policy or policies shall specify the interest of each Owner (Owner's name, Unit number, and the appurtenant undivided interest in the Common Area) and which policy or policies shall provide a standard loss payable clause providing for payment of insurance proceeds to the Association as trustee for the Owners and for the respective first Mortgagees which from time to time shall give notice to the Association of such Mortgages, such proceeds to be used in accordance with this Declaration. Each policy shall also provide that it cannot be canceled by either the insured or the insurance company until after 30 days' prior written notice is first given to each Owner and to each first Mortgagee requesting such notice. The Association shall furnish to each Owner and to Declarant a true copy of such policy together with a certificate identifying the interest of the Owner.

13.2.1 All policies of insurance shall provide that the insurance thereunder shall be invalidated or suspended only in respect to the interest of any particular Owner guilty of breach of warranty, act, omission, negligence or noncompliance with any provision of such policy, including payment of the insurance premium applicable to that Owner's interest or who permits or fails to prevent the happening of any event, whether occurring before or after a loss, which under the provisions of such policy would otherwise invalidate or suspend the entire policy. All policies of insurance shall provide further that the insurance under any such policy as to the interest of all other insured Owners not guilty of any such act or omission, shall not be invalidated or suspended and shall remain in full force and effect.

13.2.2 The commercial general liability policy shall name Declarant, the Management Company, and the Association as the insured, with the Association as trustee for the

Owners, and shall protect each Owner against liability for acts of the Association in connection with the ownership, operation, maintenance, or other use of the Buildings.

13.3 Insurance Proceeds. The Association shall receive the proceeds of any casualty insurance payments received under policies obtained and maintained pursuant to this Section and as provided in Section 14. If Owners representing 80% or more of the total voting power in the Association elect not to rebuild the Project, the insurance proceeds shall be distributed to the Owners based on the ownership percentage of each Owner at the time of the casualty.

13.4 Owner's Own Insurance. Each Owner shall obtain and maintain at its own expense, insurance providing coverage in the event of damage or destruction to the Owner's Unit, regardless of the cause of such damage or destruction, and covering such other risks as Owner may deem appropriate. The foregoing insurance shall be in such amounts as shall provide for full replacement of the Owner's Unit, including all betterments and improvements made to thereto), and all personal property located therein and the contents thereof. Each Owner shall also obtain and maintain liability insurance covering all occurrences commonly insured against death, bodily injury, and property damage, with a per limit occurrence of not less than $500,000.00 and an annual aggregate limit of not less than $1,000,000.00, arising out of or in connection with the use, ownership, or maintenance of the Owner's Unit. All policies carried by each Owner pursuant to this Section 13.4 shall: (a) name the Association and Declarant as additional insureds with rights to enforce; (b) be without contribution with respect to any insurance maintained by the Association for the benefit of all Owners; and (c) provide that the insurer waives all rights of subrogation as against the Association, Declarant, and each other Owner.

13.5 Mutual Waiver of Subrogation Rights. Whenever: (a) any loss, cost, damage, or expense resulting from fire, explosion, or any other casualty or occurrence is incurred by Declarant, Association, or Owner, or anyone claiming by, though, or under Declarant, Association, or Owner in connection with the Project; and (b) Declarant, Association, or such Owner is then covered or required to be covered under this Declaration to be so insured in whole or in part by insurance with respect to such loss, costs, damage, or expense, then the party so insured (or so required) releases the other parties from any liability said other parties may have on account of such loss, costs, damage, or expense to the extent of any amount recovered by reason of such insurance (or which could have been recovered had such insurance been carried as so required) and waives any right of subrogation that might otherwise exist in or accrue to any Person on account thereof, provided that such release of liability and waiver of the right of subrogation shall not be operative in any case where the effect thereof is to invalidate such insurance coverage. Declarant, the Association, and each Owner shall obtain and furnish evidence to the other Party of the waiver by its insurance carrier(s) of any right of subrogation.

SECTION 14 CASUALTY, DAMAGE, OR DESTRUCTION

14.1 Association As Agent. All the Owners irrevocably constitute and appoint the Association their true and lawful attorney-in-fact in their name, place, and stead for the purpose of dealing with their Condominium upon the Condominium's damage or destruction as hereinafter provided. Acceptance by any grantee of a deed from Declarant or from any Owner shall constitute such appointment.

14.2 General Authority of Association. As attorney-in-fact, the Association shall have full and complete authorization, right and power to make, execute and deliver any contract, deed, or other instrument with respect to the interest of an Owner that may be necessary or appropriate to exercise the powers herein granted. Repair and reconstruction of the improvements as used in succeeding Sections means restoring the Project, including the site improvements, equipment, and facilities therein, to substantially the same condition in which it existed prior to damage, with each Unit and the Common Area having substantially the same vertical and horizontal boundaries as before. The proceeds of any insurance collected shall be available to the Association for the purpose of repair or reconstruction unless Owners representing 80% or more of the total voting power in the Association agree not to rebuild in accordance with the provisions set forth hereinafter.

14.3 Estimate of Costs. As soon as practicable after an event causing damage to, or destruction of, any part of the Project, the Association shall obtain estimates that it deems reliable of the costs of repair or reconstruction of that part of the Project damaged or destroyed.

14.4 Repair or Reconstruction. As soon as practicable after receiving these estimates, the Association shall diligently pursue to completion the repair or construction of that part of the Project damaged or destroyed. The Association may take all necessary or appropriate action to effect repair or reconstruction, as attorney-in-fact for the Owners, and no consent or other action by any Owner shall be necessary in connection therewith. Such repair or reconstruction shall be in accordance with the original plans and specifications of the Project or may be in accordance with any other plans and specifications the Association may approve, provided that in such latter event the number of cubic feet and the number of square feet of any Unit may not vary by more than five percent from the number of cubic feet and the number of square feet for such Unit as originally constructed pursuant to such original plans and specifications without the written consent of all affected Owners, and the location of the Units shall be substantially the same as prior to damage or destruction.

14.5 Funds for Reconstruction. The proceeds of any insurance collected shall be available to the Association for the purpose of repair or reconstruction. If the proceeds of the insurance are insufficient to pay the estimated or actual cost of such repair or reconstruction, the Association, pursuant to Section 9.4 hereof, may levy in advance a Special Assessment sufficient to provide funds to pay such estimated or actual costs of repair or reconstruction. Such Special Assessments shall be allocated and collected as provided in Section 9.4. Further levies may be made in like manner if the amounts collected prove insufficient to complete the repair or reconstruction.

14.6 Disbursement of Funds for Repair or Reconstruction. The insurance proceeds held by the Association and the amounts received from the assessments provided in Section 14.5 constitute a fund for the payment of costs of repair and reconstruction after casualty. It shall be deemed that the first money disbursed in payment for the cost of repair or reconstruction shall be made from insurance proceeds; if there is a balance after payment of all costs of such repair or reconstruction, such balance shall be distributed to the Owners requiring repair and/or reconstruction of such Owners' Units in proportion to the contributions by such Owners pursuant to the assessments by the Association under Section 14.5.

14.7 Decision Not to Rebuild. If 80% or more of the Owners agree not to rebuild, the Project shall be sold. All insurance proceeds and all sale proceeds shall be apportioned among the Owners in the same proportions as their share of the Common Area as provided in Exhibit D and such apportioned proceeds shall be paid into separate accounts, each such account representing one Condominium. Each such account shall remain in the name of the Association and shall be further identified by the Condominium designation and the name of the Owner. From each separate account the Association, as attorney in fact, shall use and disburse the total amount of such accounts without contribution from one account to the other, first to Mortgagees and other lienors in the order of priority of their Mortgages and other liens, and the balance remaining to each respective Owner.

SECTION 15 CONDEMNATION

15.1 Consequences of Condemnation. If at any time or times during the continuance of the condominium ownership regime pursuant to this Declaration, all or any part of the Project shall be taken or condemned by any public authority or sold or otherwise disposed of in lieu of or in avoidance thereof, the following provisions of this Section shall apply.

15.2 Proceeds. All compensation, damages, and other proceeds from condemnation, the sum of which is hereinafter called the "**Condemnation Award**," shall be payable to the Association.

15.3 Complete Taking. If all of the Units are taken or condemned or sold or otherwise disposed of in lieu of or in avoidance thereof, the condominium ownership regime pursuant hereto shall terminate. The Condemnation Award shall be apportioned among the Owners in the same proportions as their share of the Common Area as provided in Exhibit D, provided that if a standard different from the value of the Condominiums as a whole is employed to measure the Condemnation Award in the negotiation, judicial decree, or otherwise, then in determining such shares the same standard shall be employed to the extent it is relevant and applicable. On the basis of the principle set forth in the last preceding paragraph, the Association shall, as soon as practicable, determine the share of the Condemnation Award to which each Owner is entitled and pay such amounts as soon as practicable.

15.4 Partial Taking. If less than all of the Units are taken or condemned or sold or otherwise disposed of in lieu of or in avoidance thereof, the condominium ownership regime hereunder shall not terminate. As soon as practicable the Association shall, reasonably and in good faith, allocate the Condemnation Award between compensation, damages, or other proceeds and shall apportion the amounts so allocated among the Owners as follows:

15.4.1 Allocation to Common Area. The total amount allocated to taking of or injury to the Common Area shall be apportioned among the Owners in the same proportions as their share of the Common Area as provided in Exhibit D.

15.4.2 Allocation to Condominiums. The total amount allocated to severance damages shall be apportioned to those Condominiums which were taken or condemned as follows: (a) the respective amounts allocated to the taking of or injury to a particular Unit and/or improvements an Owner has made within the Owner's own Unit shall be apportioned to the

particular Unit involved; and (b) the total amount allocated to consequential damages and any other takings or injuries shall be apportioned as the Board, in its reasonable opinion, determines to be equitable in the circumstances. If an allocation of the Condemnation Award is already established in negotiation, judicial decree, or otherwise, then in allocating the Condemnation Award the Association shall employ such allocation to the extent it is relevant and applicable.

15.5 Reorganization. If a partial taking results in the taking of a complete Unit, then, upon the distribution of such Owner's apportioned proceeds, the Owner thereof automatically shall cease to be a member of the Association. Thereafter the Association shall re-allocate the ownership, voting rights, and assessment ratio determined in accordance with this Declaration according to the same principles employed in this Declaration at its inception and shall submit such re-allocation to the remaining Owners for approval and amendment of this Declaration as provided in Section 19.1.

15.6 Reconstruction and Repair. Any reconstruction and repair necessitated by condemnation shall be governed by the procedures specified in Section 14.

SECTION 16 DISCLAIMERS, WAIVERS, AND ACKNOWLEDGMENTS

16.1 Disclaimer and Waiver of Warranties. Without limiting any other provision in this Declaration, by acceptance of deed to a Condominium, each Owner shall conclusively be deemed to understand, and to have acknowledged and agreed to, all the following:

16.1.1 That Declarant disclaims any and all warranties, express and implied, including without limitation the implied warranty of habitability and the implied warranty of fitness for a particular purpose, and by acceptance of a deed to a Condominium, each Owner waives and releases Declarant with respect to any such warranties;

16.1.2 That the Project is or may be located within or nearby certain airplane flight patterns, and/or subject to levels of airplane traffic noise; and that Declarant specifically disclaims any and all representations and warranties, express and implied, arising from or relating to airplane flight patterns, and/or airplane traffic noise; and each Owner waives and releases Declarant from any and all claims arising from or relating to airplane flight patterns or airplane traffic noise;

16.1.3 That the Project is or may be located adjacent to or nearby roadways and subject to levels of traffic thereon, and to noise, dust, and other nuisances arising from such roadways and levels of traffic; that Declarant specifically disclaims any and all representations and warranties, express and implied, arising from or related to such roadways and levels of traffic thereon, and to noise, dust, and other nuisances arising from such roadways and levels of traffic; and each Owner waives and releases Declarant from any and all claims arising from or related to roadways and levels of traffic thereon, and to noise, dust, and other nuisances arising from such roadways and levels of traffic;

16.1.4 That construction and installation of improvements by Declarant or other Owners, or third parties, may involve the operation of noisy equipment and generate dust from any Unit and/or Common Areas; and each Owner waives and releases Declarant from any

and all claims arising from or relating to such construction and installation, including but not limited to, any claims for nuisance or health hazards;

16.1.5 That construction is an industry inherently subject to variations and imperfections, and items that do not materially affect safety or structural integrity shall be deemed "Expected Minor Flaws" (including, but not limited to: reasonable wear, tear or deterioration; shrinkage, swelling, expansion or settlement; squeaking, peeling, chipping, cracking, or fading; touch-up painting; minor flaws or corrective work; and like items) and not constructional defects; and that and each Owner waives and releases Declarant from any and all claims arising from or relating to such Expected Minor Flaws; and

16.1.6 That creation of the Project shall not create any duty whatsoever of Declarant with regard to security or protection of Person or property within or adjacent to the Project; and each Owner waives and releases Declarant from any and all claims arising from or related to such security or protection, or lack thereof.

SECTION 17 RESOLUTION OF DISPUTES

17.1 Agreement to Avoid Litigation. Declarant, the Association, and the Owners agree that it is in their best interests to provide a fair, impartial, and expeditious procedure for the resolution of disputes related to the Condominium Documents instead of costly, lengthy, and unpredictable litigation. Accordingly, Declarant, the Association (including its Board, officers, and committee members), each Owner, and any party claiming a right or interest under the Condominium Documents (each, a "Bound Party") agree to encourage the efficient resolution of disputes within the Project without the emotional and financial costs of litigation. Each Bound Party therefore covenants and agrees that all claims, grievances, or disputes arising out of or relating to the interpretation, application, or enforcement of the Condominium Documents or the rights, obligations, or duties of any Bound Party under the Condominium Documents ("Claims") shall be subject to the provisions of Section 17.3 unless exempt under Section 17.2. All Claims shall be subject to resolution pursuant to this Section 17 as a condition precedent to the institution or continuation of any legal or equitable proceeding; provided, however, any Bound Party may proceed in accordance with applicable law to comply with any notice or filing deadlines prior to resolution of the Claim

17.2 Exemptions. None of the following Claims shall be subject to this Section 17 unless all Bound Parties thereto agree in writing to submit such Claim to the dispute resolution procedures set forth in this Section 17:

17.2.1 Any Claim by the Association against any Bound Party to enforce the obligation to pay any Assessment to the Association under the Condominium Documents;

17.2.2 Any Claim by Declarant or the Association to obtain injunction or equitable relief to enforce any provision of the Condominium Documents;

17.2.3 Any Claim between Owners where Declarant or the Association are not a party thereto, which Claim would constitute a cause of action independent of the Condominium Documents;

17.2.4 Any Claim in which any indispensable party is not a Bound Party;

17.2.5 Any Claim against a Released Party that would be barred by Section 8.9;

17.2.6 Any Claim that otherwise would be barred by Applicable Law (such as, for example, the applicable statute of limitations); or

17.2.7 Any Claim arising out of or relating to the interpretation, application, or enforcement of any purchase, sale, or construction agreement with Declarant or any builder related to the construction of improvements within the Project, or the rights, obligations, or duties of any Bound Party under such agreements, it being understood that Applicable Law and the provisions of such agreements shall control the resolution of any claims or disputes related thereto.

17.3 Dispute Resolution.

17.3.1 Direct Discussions. Any Bound Party having a Claim against any other Bound Party shall notify such party(ies) of the Claim in writing, stating plainly and concisely the following: (a) the nature of the Claim; (b) the legal basis of the Claim (i.e., the specific authority out of which the Claim arises); (c) the basic facts supporting the allegations in the Claim; (d) the other Persons involved in the Claim or with personal knowledge of the facts alleged; and (e) the claimant's proposed remedy, including the specific monetary amounts (if any) demanded. The Bound Parties to the Claim shall make reasonable efforts to meet in person to resolve the Claim by good faith discussions and negotiations since the best opportunity to achieve a fair and satisfactory resolution to a Claim is ordinarily through early discussions and negotiations held in good faith.

17.3.2 Dispute Resolution. If the Bound Parties to a Claim are unable to resolve the Claim through direct discussions within a reasonable time, either Bound Party may submit the Claim to the Board for assistance in resolving the Claim. In such event, the Board may, by notice to each Bound Party to the Claim within 30 days of its receipt of a request for assistance:

17.3.2.1 Order the Bound Parties to continue direct discussions and negotiations for a period of up to 30 days. If the Claim is not resolved in such period, any Bound Party may request the Board's further assistance to resolve the Claim;

17.3.2.2 Order the Bound Parties to mediate the Claim with an independent real estate attorney, real estate professional, or judge selected by the Board. The mediator shall set the rules of the mediation. Any party to the mediation can invite additional parties to the mediation if the presence of such additional party is required for a complete resolution of any Claim. The parties shall share the mediator's fee and any filing fees equally. Unless otherwise agreed, the mediation shall be held within 30 days after the order for mediation and shall be held in a neutral location near the Project selected by the mediator. Agreements reached in mediation shall be enforceable as settlement agreements in any court having jurisdiction thereof. If the mediation does not resolve the Claim, the Bound Parties may proceed to litigation of the Claim in any court of competent jurisdiction;

17.3.2.3 Order the Bound Parties to settle the Claim through arbitration by a single arbitrator conducted in accordance with the Idaho Uniform Arbitration Act (Idaho Code, Title 7, Chapter 9) except as otherwise provided herein. The arbitrator shall be any independent real estate attorney or judge appointed by the Board. The arbitrator shall set the rules of the arbitration. The arbitrator may, in its discretion, order parties to produce documents relevant to the dispute and may order written discovery and depositions (but with care to avoid burdensome discovery or depositions). The arbitrator shall endeavor to hold the arbitration at mutually convenient times and locations; provided, however, the arbitrator shall endeavor to complete the arbitration within 45 days after appointment of the arbitrator. The parties shall bear their own attorneys' fees (if any) and share the arbitrator's fees equally; provided, however, the arbitrator may award costs, arbitrator's fees, and attorneys' fees to the substantially prevailing party. The arbitrator's award shall be final, and judgment may be entered upon it in accordance with Applicable Law in any court having jurisdiction thereof;

17.3.2.4 If the Claim is within the jurisdiction of the Small Claims Department of the Magistrate Division, order the Bound Parties to file such Claim exclusively therein;

17.3.2.5 Elect to exempt the Claim from this Section 17, at which time the Bound Parties are free to exercise any right or remedy in accordance with Applicable Law.

If the Board fails to notify the Bound Parties within 30 days of its receipt of a request for assistance, the Board shall be deemed to have elected to exempt the Claim from this Section 17. If the Board or the Association is a Bound Party, the Bound Parties will attempt to resolve the Claim pursuant to Section 17.3.2.1, and in the event such Claim cannot be resolved, the Claim shall be deemed exempt from this Section 17.

17.3.3 Enforcing Resolutions. If the Bound Parties resolve any Claim through mediation or arbitration pursuant to this Section 17 and any Bound Party thereafter fails to abide by the terms of such resolution (i.e., settlement agreement or arbitrator's award), then any other Bound Party may take any legal or other action to enforce such settlement agreement or arbitrator's award without the need to comply again with the procedures set forth in this Section 17. In such event, the Bound Party taking action to enforce the resolution shall be entitled to recover from any non-complying Bound Party all costs and attorneys' fees reasonably incurred in such enforcement.

SECTION 18 DECLARANT CONTROL PERIOD

18.1 Declarant Control Period. The "Declarant Control Period" shall commence on the Effective Date of this Declaration and terminate on the day Declarant (or the assignee of Declarant's rights hereunder) no longer owns any Units or on the day Declarant terminates its rights by delivery of notice to the Association and recording a copy of the same in the real property records of Valley County, Idaho, whichever occurs first.

18.2 Project Management. Each Owner recognizes that the Project will require a high level of knowledge, effort, judgment, diligence, and attention during the Declarant Control Period, and that level is beyond what can reasonably be expected from Project volunteers. Accordingly,

Declarant shall have full management authority for the Project during the Declarant Control Period, including the sole and exclusive right to appoint, remove, and replace directors of the Board, and to fill vacancies on the Board, at any time and from time-to-time in Declarant's sole discretion.

18.3 Declarant Exemptions. During the Declarant Control Period, Declarant may, from time-to-time in Declarant's discretion and without first seeking or obtaining the approval of Association:

18.3.1 Make modifications or improvements to the Common Area as Declarant deems appropriate, and may also make modifications or improvements to any Unit prior to the conveyance thereof as Declarant deems appropriate;

18.3.2 Place or authorize signs of such size, design, and number as Declarant deems appropriate for the initial development of the Project, including signs to identify the Project, display information pertaining to the Project, display information or instructions to builders, advertise Condominiums for sale (including sale events and open houses), and to advertise Project elements or events;

18.3.3 Use or allow any third party to use any Condominium as a model unit, sales office, or construction office;

18.3.4 Place or authorize portable or temporary structures upon the Common Area of the Project, and otherwise allow the Common Area to be used as a construction storage yard; and

18.3.5 Establish or reserve such additional covenants, conditions, restrictions, or easements on any Condominium prior to conveyance thereof as Declarant deems necessary or convenient for the development of the Condominium or Project.

18.4 Declarant's Exemption from Assessments. Declarant shall not be assessed any Regular Assessments or Special Assessments for any Condominiums owned by Declarant. During the Declarant Control Period, Declarant shall pay the shortfall, if any, in the operating Expenses of the Association; provided, however, such obligation shall not exceed the amount that the Regular Assessments and Special Assessments that Declarant would otherwise be assessed as an Owner multiplied by the total number of Condominiums owned by Declarant on the date Regular Assessments or Special Assessments are assessed against the Owners of Condominiums. Following the Declarant Control Period, Declarant shall be assessed Regular Assessments and Special Assessments for each Condominium owned by Declarant.

18.5 Assignment of Declarant's Rights. Declarant may assign any or all of its rights under the Condominium Documents to any Person in a written instrument(s) that contains the assignee's acceptance of such assignment and agreement to assume any of Declarant's obligations pertaining to the rights assigned, which acceptance and assumption shall be effective upon the recording of such written instrument(s) in the real property records of Valley County, Idaho. Declarant shall promptly provide a copy of the recorded instrument to the Association and,

thereupon, be released from Declarant's obligations pertaining to the rights assigned and the obligations assumed.

SECTION 19 MISCELLANEOUS

19.1 Amendment.

19.1.1 By Whom. During the Declarant Control Period, Declarant shall have the exclusive right to amend or terminate this Declaration by executing a written instrument setting forth such amendment or termination, and the same shall be effective upon the recording thereof in the real property records of Valley County, Idaho. After the Declarant Control Period, any amendment to this Declaration or termination hereof shall be by a written instrument setting forth such amendment or termination, signed and acknowledged by the president and secretary of the Association certifying and attesting that such amendment or termination has been approved by the vote or written consent of members representing more than 65% of the total voting power in the Association, and the same shall be effective upon the recording thereof in the real property records of Valley County, Idaho.

19.1.2 Effect of Amendment. Any amendment or termination of this Declaration approved in the manner specified above shall be binding on and effective as to all Owners notwithstanding that such Owners may not have voted for or consented to such amendment or termination. Any amendment may add to and increase the covenants, conditions, restrictions, and easements applicable to the Project but shall not prohibit or unreasonably interfere with the allowed uses of such Owner's Condominium that existed prior to the said amendment.

19.2 Mortgage Protection. Upon written request to the Association from any holder, insurer, or guarantor of any first Mortgage stating its name, address and the Unit number or address of the Unit on which it has its first Mortgage, said holder, insurer, or guarantor of a first Mortgage encumbering a Unit shall be entitled to notice of the following:

19.2.1 Any condemnation or casualty loss that affects either a material portion of a Building or a Unit encumbered by such first Mortgage;

19.2.2 Any 60-day delinquency in the payment of Assessments or charges owed by the Owner of any Unit on which it holds a first Mortgage; and

19.2.3 A lapse, cancellation, or material modification of any insurance policy maintained by the Association.

19.3 Enforcement and Non-Waiver.

19.3.1 Right of Enforcement. Except as otherwise provided herein, any Owner, the Association, and Declarant shall each have the right to enforce the provisions of this Declaration against any Condominium or any part or portion of the Project and against the Owners thereof.

19.3.2 Non-Waiver. Failure of Declarant or the Board to insist upon strict compliance with this Declaration or other Condominium Documents, or to exercise any right contained in such documents, or to serve any notice or to institute any action, shall not be construed as a waiver or a relinquishment of the right to insist on compliance in the future with any term, covenant, condition, or restriction. The receipt by the Board of payment of an Assessment from an Owner, with knowledge of a breach by the Owner, shall not be a waiver of the breach. No waiver by the Board of any requirement shall be effective unless expressed in writing and signed for by the Board.

19.4 Affects Title. Title to each Condominium is subject to the terms and conditions of this Declaration, which bind Declarant and all subsequent Owners, whether or not it is expressed in the deed by which any Owner acquires a Condominium.

19.5 Registration of Mailing Address. Each Owner shall register such Owner's email address and mailing address with the Association and all notices or demands intended to be served upon any Owner shall be sent by United States Mail postage prepaid, addressed in the name of the Owner at such registered mailing address. If an Owner fails to provide the Association with a valid address, all notices shall be sent to that Owner's address on record with the Valley County Assessor's office. All notices or demands intended to be served upon the Association shall be given by registered or certified mail, postage prepaid, to the address of the Association's registered agent on file with the Idaho Secretary of State. All notices or demands to be served on Mortgagees pursuant hereto shall be sent by either registered or certified mail, postage prepaid, addressed in the name of the Mortgagee at such address as the Mortgagee may have furnished to the Association in writing. Unless the Mortgagee furnishes the Association such address, the Mortgagee shall not be entitled to receive any of the notices provided for in this Declaration. Any notice referred to in this Section shall be deemed given when deposited in the United States mail in the form provided for in this Section.

19.6 Interpretation. The provisions of this Declaration shall be liberally construed to effectuate its purpose of creating a uniform plan for the development and operation of the Project. This Declaration shall be construed and governed under the laws of the State of Idaho without regard to its conflicts of law principles, and the following:

19.6.1 All the provisions of this Declaration shall be liberally construed together to promote and effectuate the fundamental concepts of the development of the Project as set forth in the recitals to this Declaration.

19.6.2 Notwithstanding the provisions of the foregoing Section 19.6.1, each of the provisions of this Declaration shall be deemed independent and severable, and the invalidity or partial invalidity of any provision or portion thereof shall not affect the validity or enforceability of any other provision herein.

19.6.3 Unless the context requires a contrary construction, the singular shall include the plural and the plural the singular; and the masculine, feminine or neuter shall each include the masculine, feminine and neuter.

19.6.4 As used herein, the word "including" shall be deemed to be followed by "but not limited to" unless otherwise indicated.

19.6.5 All captions, titles and the table of contents used in this Declaration are intended solely for convenience of reference and shall not affect that which is set forth in any of the provisions hereof.

19.7 Owner's Obligations Continue. All obligations of the Owner under and by virtue of the provisions in this Declaration shall continue, notwithstanding that such Owner may have leased, rented, or entered a contract of sale of Owner's interest as provided herein, but the Owner of a Condominium shall have no obligation for Assessments or other obligations accruing after the Owner conveys such Condominium.

19.8 Exhibits. All exhibits attached to this Declaration are incorporated herein as if set forth in full herein. However, in the event of any conflict between such exhibits and the text of this Declaration, the text of this Declaration shall control.

19.9 Acknowledgement and Waivers. All Owners expressly acknowledge that there are no understandings, representations, warranties or promises of any kind that have been made to induce the Owners from owning Units in the Project except as set forth in this Declaration, that this Declaration sets forth in full the entire agreement between the parties and governing the Project, and the Owners have not relied on any verbal agreement, statement, representation, warranty or other promises that is not expressed in writing in this Declaration. Each Owner has acquired and accepted its Condominium Unit "as is, where is" with all faults. No Person, agent or employee of Declarant has any authority to modify the terms of this Section, and no Person on Declarant's behalf is authorized to make any future verbal agreement upon which any Owner may rely to cancel, change, or modify any portion of this Declaration. This Declaration supersedes all prior understandings and agreements. This Declaration may be amended or modified only in accordance with the terms of this Declaration.

[END OF TEXT]

This Declaration is executed effective as of the Effective Date.

, LLC,
an Idaho limited liability company

By:_____
_____, _____

STATE OF IDAHO)
) ss.
County of_____)

This record was acknowledged before me on _____, 2024, by _____as_____of **, LLC**.

_____
Signature of notary public

My commission expires: _____

EXHIBIT A
Legal Description of the Property

EXHIBIT B
Plat of Alpine Storage
Condominiums

EXHIBIT C
Articles of Incorporation

EXHIBIT D
Proportionate Interest in Common Area

Unit Number	Square Footage	Ownership Percentage

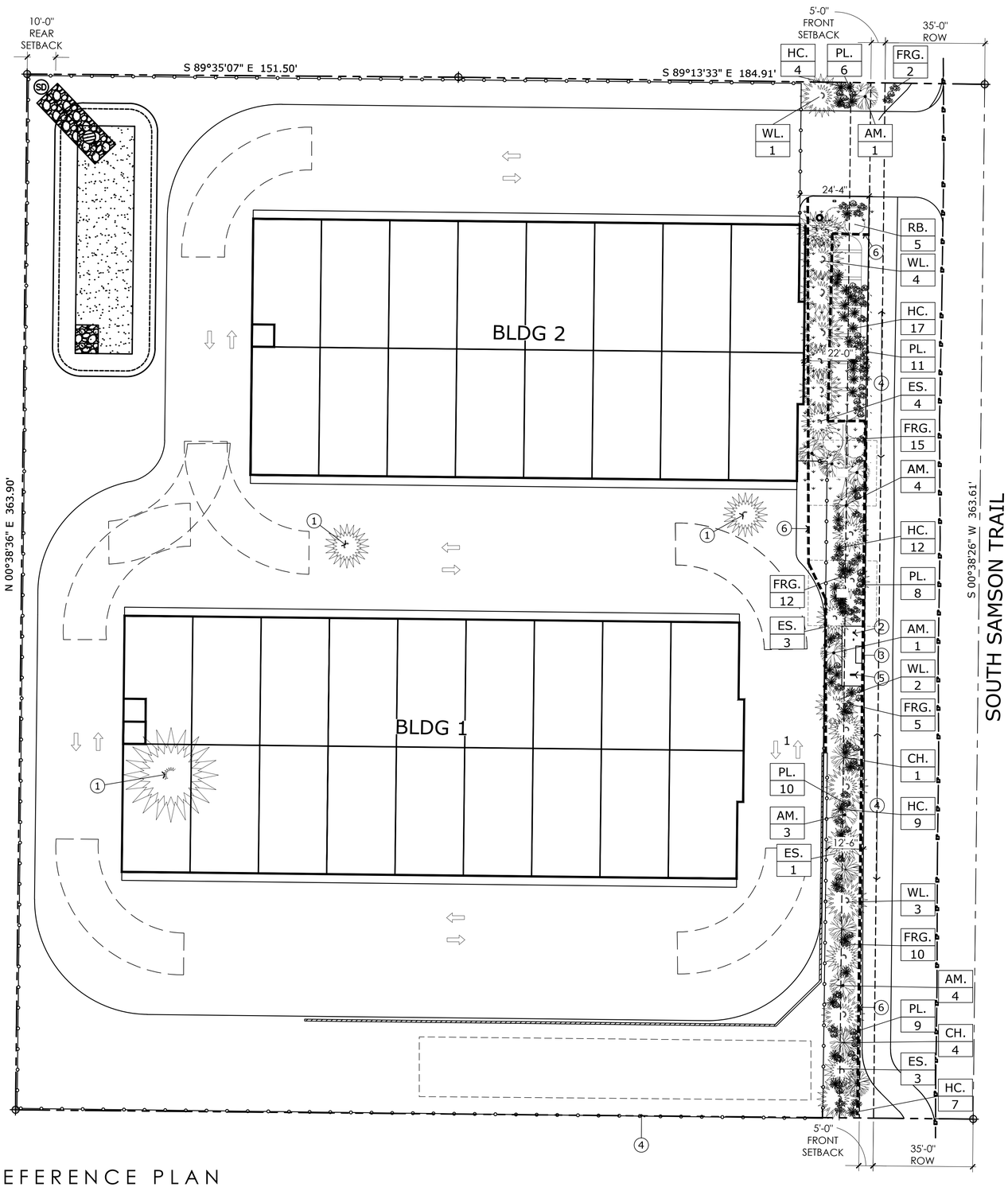

SITE REFERENCE PLAN

SCALE: 1''=20'-0''

LANDSCAPE SCHEDULE

	SYMBOL	ABBR.	BOTANICAL NAME	SIZE	MATURE SIZE H&W	CLASS	QTY
DECIDUOUS TREES		CH.	COMMON HACKBERRY CELTIS OCCIDENTALIS	2" CAL. B&B	45' x 35'	CLASS II	5
		RB.	RIVER BIRCH BETULA NIGRA	2" CAL. B&B	40' x 35'	CLASS II	5
		AM.	AMUR MAPLE ACER GINNALA	2" CAL. B&B	20' x 20'	CLASS I	13
CONIFEROUS TREES			BOTANICAL NAME	SIZE	MATURE SIZE H&W		QTY
		WL.	WESTERN LARCH LARIX OCCIDENTALLIS	6' HT.	100' x 20'		10
		ES.	ENGELMANN SPRUCE PICEA ENGELMANNII	6' HT.	100' x 15'		10
GROUND COVERS			BOTANICAL NAME	SIZE	MATURE SIZE H&W		QTY
			NATIVE SEED MIX				19,200 S.F.
							9,800 S.F.
SHRUBS			BOTANICAL NAME	SIZE	MATURE SIZE H&W		QTY
		FRG.	FEATHER REED GRASSCALAMAGROSTIS X ACUTIFLORA	2 GAL	3' x 2'		44
		PL.	PLANTAIN LILY HOSTA FORTUNEI	3 GAL	3' x 4'		44
		HC.	HILLSIDE CREEPER PINUS SYLVESTRIS	5 GAL	5' x 8'		49

KEYNOTES

1. EXISTING TREES TO BE REMOVED.
2. PROPOSED PUBLIC BIKE RACK.
3. PROPOSED PUBLIC BENCH.
4. EXISTING PUBLIC RECYCLED ASPHALT PATHWAY.
5. PUBLIC BIKE FIX-IT STATION.
6. CONTINUOUS ROOT BARRIER, SEE NOTE C

LANDSCAPING GENERAL NOTES

A. ALL PLANT MATERIALS SHALL BE WATERED BY THE PROPOSED PRIVATE AUTOMATIC IRRIGATION SYSTEM.

B. ALL PLANTINGS TO BE SALT TOLERANT.

C. PROPOSED & EXISTING TREES SHOWN BETWEEN THE PATHWAY AND THE BUILDINGS REQUIRE A 4-FOOT DEEP ROOT BARRIER PERIMETER. PROVIDE A 48" x AS REQ'D. "HDPE" CONTINUOUS ROLL OR SHEET PRODUCT FOR ROOF BARRIERS WHERE REQ'D.

SCENIC ROUTE CALCS

FRONTAGE LENGTH: 364'

REQUIRED TREES: 1 PER EVERY 10'
364/10= 36.4 TREES WITH NOT LESS THAN 50% BEING EVERGREEN.

PROVIDED TREES: 20 EVERGREEN AND 23 DECIDUOUS TREES, 43 TOTAL

REQUIRED SHRUBS: 3 PER EVERY 10'
364/3= 121.3 SHRUBS

PROVIDED SHRUBS: 137 SHRUBS

HATCH DESIGN ARCHITECTURE
612 W. STATE ST.
BOISE, IDAHO 83703
OFFICE: (208) 475.3204
FAX: (208) 475-3205

COPYRIGHT 2026
JEFF HATCH

THIS PLAN AND/OR DESIGN ARE NOT TO BE CHANGED OR COPIED IN ANY FORM OR MANNER WHATSOEVER NOR ARE THEY TO BE ASSIGNED TO A THIRD PARTY WITHOUT WRITTEN CONSENT AND COMPENSATION TO THE FOUNDATION TO THOSE DESIGN ARCHITECTURE.

THE USE OF THE PLANS SHALL BE RESTRICTED TO THE ORIGINAL SITE FOR WHICH THEY WERE PREPARED AND PUBLICATION THEREOF IS EXPRESSLY LIMITED TO SUCH USE. DRAWINGS, SPECIFICATIONS AND OTHER DOCUMENTS, INSTRUMENTS OF SERVICE FOR USE SOLELY WITH RESPECT TO THIS PROJECT AND, UNLESS OTHERWISE PROVIDED, THE DESIGNER AND THE DESIGNER'S CONSULTANTS ARE THE AUTHORS AND OWNERS OF THEIR RESPECTIVE INSTRUMENTS OF SERVICE FOR USE SOLELY WITH RESPECT TO THIS PROJECT. ALL SUCH INSTRUMENTS OF SERVICE ARE AND SHALL REMAIN THE PROPERTY OF THE DESIGNER AND THE CONSULTANTS SHALL BE DEEMED THE AUTHORS AND OWNERS OF THEIR RESPECTIVE INSTRUMENTS OF SERVICE AND SHALL RETAIN ALL COMMON LAW, STATUTORY AND OTHER RESERVED RIGHTS, INCLUDING COPYRIGHTS.

NEW CONSTRUCTION FOR:

ALPINE STORAGE

450 S SAMSON TRAIL, MCCALL, ID

DELTA	DATE	DESCRIPTION- COMMENTS
1	06-08-26	BID ADDENDUM 1

DATE:	JUNE 2026
DRAWN BY:	ST
CHECKED BY:	JLH
JOB NUMBER:	23116

SHEET TITLE
LANDSCAPE PLAN

SHEET NUMBER
L-1.0
SHEET

PRELIMINARY PLAT
OF
ALPINE STORAGE CONDOMINIUMS

LOCATED WITHIN THE SE 1/4 OF THE SE 1/4 OF
SECTION 16, TOWNSHIP 18 NORTH, RANGE 3 EAST,
BOISE MERIDIAN, VALLEY COUNTY, IDAHO
2026

0 30 60 Feet

LEGEND
EXISTING CONDITIONS

- EDGE OF PAVEMENT
- FENCE LINE
- EXISTING OVERHEAD WIRES
- EXISTING FLOWLINE
- EXISTING STORM DRAIN PIPE
- EXISTING STORM DRAINAGE TOP BANK
- EXISTING TREE, TRUNK DIAMETER IN INCHES
- EXISTING UTILITY POLE
- EXISTING ELECTRIC POINT OF ENTRY
- EXISTING POWER METER
- EXISTING GAS METER
- EXISTING PIZOMETER
- EXISTING ASPHALT

LEGEND
BOUNDARY AND PROPOSED IMPROVEMENTS

- SURVEYED PARCEL BOUNDARY
- ADJACENT RECORD BOUNDARY
- PRESCRIPTIVE RIGHT-OF-WAY BOUNDARY
- PLATTED RIGHT-OF-WAY BOUNDARY
- SECTIONAL LINE
- PROPOSED BUILDING SETBACK
- PROPOSED EASEMENT BOUNDARY
- EDGE OF PAVEMENT
- FENCE LINE
- FOUND 1/2" REBAR, AS NOTED
- FOUND 5/8" REBAR, AS NOTED
- FOUND ALUMINUM CAP
- FOUND IRON PIPE
- FOUND MAG/PK NAIL
- CATCH/GRATED MANHOLE
- SEWER MANHOLE
- SEWER CLEANOUT
- WATER WELL
- FIRE DEPARTMENT CONNECTION
- TRANSFORMER
- ASPHALT
- CONCRETE

NOTES

1. EXISTING CONDITIONS AND TOPOGRAPHY DEPICTED HEREON IS AS OBSERVED ON 06/16/2026.
2. THE BOUNDARY SHOWN HEREON IS BASED UPON AN ACTUAL SURVEY ON THE GROUND BY LR GEO AND VERIFIES CONFORMS TO THE BOUNDARY DEPICTED ON RECORD OF SURVEY I.N. 458615 (R4).
3. MINIMUM BUILDING SETBACKS SHALL BE IN ACCORDANCE WITH VALLEY COUNTY APPLICABLE ZONING AND SUBDIVISION REGULATIONS AT THE TIME OF ISSUANCE OF INDIVIDUAL BUILDING PERMITS OR AS SPECIFICALLY APPROVED AND/OR REQUIRED.
4. A TEN (10) FOOT WIDE PUBLIC UTILITY EASEMENT AND PRIVATE IRRIGATION EASEMENT SHALL BE RESERVED ALONG THE SUBDIVISION BOUNDARY, AS SHOWN HEREON.
5. PROPOSED WATER AND SEWER, AS PROVIDED BY CIVIL SITE WORKS, ARE DEPICTED HEREON SCHEMATICALLY FOR PRELIMINARY PLAT PURPOSES ONLY.
6. 35' OF RIGHT-OF-WAY TO BE DEDICATED TO THE HIGHWAY DEPARTMENT.
7. IDAHO POWER HAS A BLANKET ABOVE GROUND EASEMENT OF THE ENTIRE SURVEYED PARCEL AS DESCRIBED IN I.N. 67342.

REFERENCES

D1. WARRANTY DEED I.N. 435630; DECEMBER 2020
R1. ROS I.N. 327595 BY KERR SURVEYING; DECEMBER 2007
R2. ROS I.N. 431548 BY MARKS LAND SURVEYING LLC.; AUGUST 2020
R3. ROS I.N. 443925 BY ACCURATE SURVEYING & MAPPING; SEPTEMBER 2021
R4. ROS I.N. 458615 BY ACCURATE SURVEYING & MAPPING; AUGUST 2023

ABBREVIATIONS

BK	BOOK
C.R.	CORNER RECORD INSTRUMENT NUMBER
COR SEC	CORNER OF SECTION
I.N.	INSTRUMENT NUMBER, VALLEY COUNTY RECORDS
N,E,S,W	NORTH, EAST, SOUTH, WEST
P.U.E.	PUBLIC UTILITY EASEMENT
ROS	RECORD OF SURVEY

ZONING & SETBACK INFORMATION

EXISTING ZONING DESIGNATION:	CC
PROPOSED ZONING DESIGNATION:	CC
MINIMUM LOT SIZE:	122,451 S.F.
SETBACKS:	
FRONT:	5 FEET
REAR:	15 FEET
SIDE:	0 FEET

GENERAL SITE INFORMATION

PROPERTY AREA:	122,451 S.F. (2.811 ACRES)
PROPOSED USE:	STORAGE UNITS
ADDRESS:	450 S. SAMSON TRAIL
LOCATION:	SE ¼ OF THE SE ¼ SECTION 16, T.18N., R.3E.
PARCEL NUMBER (ADA COUNTY):	RP18N03E169755
FEMA FIRM PANEL:	16085C0689 (EFFECTIVE 02/01/2019)
FLOOD DESIGNATION:	ZONE X (AREA OF MINIMAL FLOOD HAZARD)

HORIZONTAL DATUM

NAD 83 (2011) 2010.00, IDAHO SPCS WEST ZONE PROJECTION. SCALED TO MCCALL GROUND GRID, WITH A COMBINED SCALE FACTOR OF 1.00030200 APPLIED ABOUT THE ORIGIN OF THE MCCALL GRID(N 1,190,000, E 2,536,000).

VERTICAL DATUM

NAVD 88, BROUGHT TO THE SITE VIA STATIC OBSERVATION PROCESSED THROUGH THE NGS OPUS UTILITY.

OWNER

ALPINE STORAGE CONDOS, LLC
200 W. 36TH ST, GARDEN CITY, ID 83714
208-724-4543

APPLICANT

HATCH DESIGN ARCHITECTURE
200 W. 36TH ST, BOISE, ID 83714
208-475-3204

SURVEYOR

CHAD LEATHERMAN, PLS
690 S. INDUSTRY WAY, SUITE 55, MERIDIAN, ID, 83642
208-519-5900

LANDSCAPE ARCHITECT

JEFFERY HATCH
200 W. 36TH ST, BOISE, ID 83714
208-475-3204

CIVIL ENGINEER

CORINNE GRAHAM, CIVIL SITE WORKS
PO BOX 6059, BOISE, ID 83707
208-946-3874

AGENCY REVIEW
09-25-2026

CERTIFICATE OF SURVEYOR

I, CHAD LEATHERMAN, DO HEREBY CERTIFY THAT I AM A PROFESSIONAL LAND SURVEYOR, LICENSED BY THE STATE OF IDAHO, AND THAT THIS MAP HAS BEEN PREPARED FROM AN ACTUAL SURVEY MADE ON THE GROUND UNDER MY SUPERVISION, AND THAT THIS MAP IS AN ACCURATE REPRESENTATION OF SAID SURVEY.

PROFESSIONAL LAND SURVEYOR · LICENSED · 19826 · STATE OF IDAHO · CHAD LEATHERMAN

LR Geo
A SURVEYING & MAPPING COMPANY
690 S. INDUSTRY WAY | SUITE 55 | MERIDIAN, IDAHO 83642
208.519.5900 | www.lr-geo.com

LRG PROJ: 26052
DRAFTED BY: JR
CHECKED BY: CL

BOOK _____ PAGE _____

PLAT SHOWING
ALPINE STORAGE CONDOMINIUMS

LOCATED WITHIN THE SE 1/4 OF THE SE 1/4 OF
SECTION 16, TOWNSHIP 18 NORTH, RANGE 3 EAST,
BOISE MERIDIAN, VALLEY COUNTY, IDAHO
2026

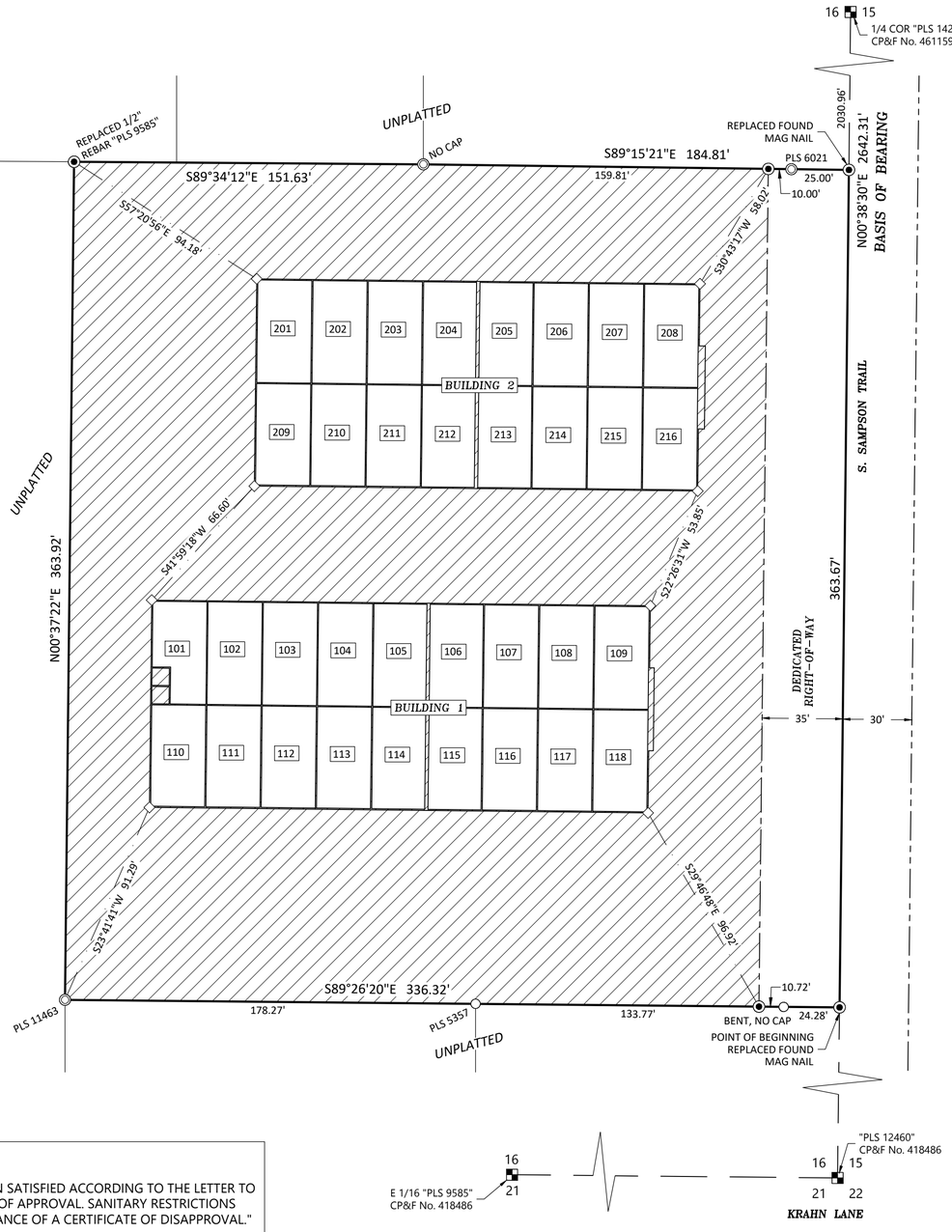

0 40 80 Feet

BASIS OF BEARING

THE BASIS OF BEARING IS GRID NORTH, IDAHO WEST ZONE PROJECTION OF NAD83 (2011) 2010.00, BEING N00°38'30"E BETWEEN THE SOUTHEAST CORNER OF SECTION 16 AND THE EAST QUARTER CORNER OF SECTION 16.

LEGEND

- SURVEYED PARCEL BOUNDARY
- ADJACENT RECORD BOUNDARY
- PRESCRIPTIVE RIGHT-OF-WAY BOUNDARY
- PLATTED RIGHT-OF-WAY BOUNDARY
- SECTIONAL LINE
- PROPOSED BUILDING SETBACK
- FOUND 1/2" REBAR, AS NOTED
- FOUND 5/8" REBAR, AS NOTED
- FOUND ALUMINUM CAP
- FOUND IRON PIPE
- SET 5/8" REBAR WITH PLASTIC CAP, STAMPED "LRG PLS 19826"
- CALCULATED POSITION ONLY
- COMMON AREA

REFERENCES

D1. WARRANTY DEED I.N. 2026-002309; MAY 2026
R1. ROS I.N. 327595 BY KERR SURVEYING; DECEMBER 2007
R2. ROS I.N. 431548 BY MARKS LAND SURVEYING LLC.; AUGUST 2020
R3. ROS I.N. 443925 BY ACCURATE SURVEYING & MAPPING; SEPTEMBER 2021
R4. ROS I.N. 458615 BY ACCURATE SURVEYING & MAPPING; AUGUST 2023

ABBREVIATIONS

BK	BOOK
C.R.	CORNER RECORD INSTRUMENT NUMBER
COR SEC	CORNER OF SECTION
I.N.	INSTRUMENT NUMBER, VALLEY COUNTY RECORDS
N,E,S,W	NORTH, EAST, SOUTH, WEST
P.U.E.	PUBLIC UTILITY EASEMENT
ROS	RECORD OF SURVEY

SURVEYOR NARRATIVE

THE PURPOSE OF THIS SURVEY IS TO PLAT PARCEL DESCRIBED IN WARRANTY DEED I.N. 2026-002309 (D1) INTO STORAGE UNIT CONDOMINIUMS.

FOUND MONUMENTS WERE HELD AS SHOWN HEREON.
THE NE, SE, AND NW CORNERS OF THE SUBDIVISION BOUNDARY WERE FOUND MONUMENTS REPLACED WITH 5/8" REBAR PER IDAHO CODE.

THE DIMENSIONS HEREON ARE BASED UPON DESIGN DRAWINGS AND WILL BE UPDATED PRIOR TO RECORDING TO MATCH "AS CONSTRUCTED" DIMENSIONS.

HEALTH CERTIFICATE

"SANITARY RESTRICTIONS AS REQUIRED BY IDAHO CODE, TITLE 50, CHAPTER 13 HAVE BEEN SATISFIED ACCORDING TO THE LETTER TO BE READ ON FILE WITH THE COUNTY RECORDER OR HIS AGENT LISTING THE CONDITIONS OF APPROVAL. SANITARY RESTRICTIONS MAY BE REIMPOSED, IN ACCORDANCE WITH SECTION 50-1326, IDAHO CODE, BY THE ISSUANCE OF A CERTIFICATE OF DISAPPROVAL."

_____
CENTRAL DISTRICT HEALTH , REHS

_____
DATE

SURVEYOR NOTES

1) THIS PLAT IS SUBJECT TO THE CONDOMINIUM PROPERTY ACT, TITLE 55, CHAPTER 15. IDAHO CODE.
2) THE DEVELOPMENT OF THIS PROPERTY SHALL BE IN COMPLIANCE WITH VALLEY COUNTY DEVELOPMENT CODE.
3) THE PHYSICAL BOUNDARIES OF THE UNITS ARE THE INTERIOR SURFACES OF THE PERIMETER WALL, FLOORS, CEILINGS, WINDOWS, DOORS AND UNIT LINES THEREOF, AND THE UNIT INCLUDES BOTH THE PORTIONS OF THE BUILDING SO DESCRIBED AND THE AIRSPACE SO ENCOMPASSED, WHICH ARE SUBJECT TO CHANGE. THE FOLLOWING ARE NOT PART OF THE UNIT: ROOFS, ROOF MEMBRANES, EXTERIOR BUILDING WALLS, COLUMNS, FLOORS, FOUNDATIONS, STUDDING, JOISTS, BEAMS, SUPPORTS AND OTHER CENTRAL SERVICES AND PIPES, DUCTS, WIRES, CONDUITS, AND OTHER UTILITY INSTALLATIONS AND FACILITIES NOT EXCLUSIVELY SERVING ANY ONE UNIT. IN INTERPRETING THE DECLARATION, PLAT OR PLATS AND DEEDS, THE EXISTING PHYSICAL BOUNDARIES OF THE UNIT AS ORIGINALLY CONSTRUCTED OR AS RECONSTRUCTED IN LIEU THEREOF SHALL BE CONCLUSIVELY PRESUMED TO BE ITS BOUNDARIES RATHER THAN THE METES AND BOUNDS EXPRESSED OR DEPICTED IN THE DECLARATION, PLAT OF PLATS, OR DEED REGARDLESS OF SETTLING OR LATERAL MOVEMENT OF THE BUILDING AND REGARDLESS OF MINOR VARIANCE BETWEEN BOUNDARIES SHOWN IN THE DECLARATION, PLAT OR PLATS, OR DEED, AND THE ACTUAL BOUNDARIES OF UNITS IN THE BUILDING.
4) TIES ARE AS SHOWN TO EXTERIOR BUILDING CORNERS ON THE PLAT, AND OVERALL DIMENSIONS ARE DETAILED ON SHEET 2. UNLESS OTHERWISE INDICATED ON THE PLAT, ALL UNIT ANGLES ARE 90 DEGREES.
5) STORM DRAIN FACILITIES LOCATED IN THE COMMON AREA ARE TO BE MAINTAINED BY THE ALPINE STORAGE CONDOMINIUMS ASSOCIATION, INC.
6) IRRIGATION WATER HAS NOT BEEN PROVIDED FOR BY THE OWNER AND THE SUBDIVISION IS NOT WITHIN THE BOUNDARY OF AN IRRIGATION ENTITY.
7) THIS DEVELOPMENT IS SUBJECT TO RESTRICTIVE COVENANTS TO THE DEVELOPMENT OF ALPINE STORAGE CONDOMINIUMS. FOR INFORMATION REGARDING THE USES, RESPONSIBILITIES, MAINTENANCE, AND RELATIONSHIPS OF THE UNITS AND REGARDING EASEMENTS AUTHORIZING OR GOVERNING COMMON AREA, COMMON ACCESS, CROSS-ACCESS, INGRESS, EGRESS, PARKING AND OTHER PURPOSES, SEE DECLARATION FOR ALPINE STORAGE CONDOMINIUMS, RECORDED AND FILED IN THE VALLEY COUNTY RECORDER'S OFFICE AS INSTRUMENT No. _____.
8) THE CONSTRUCTION OF SEPARATE PRINCIPAL BUILDINGS IS PROHIBITED.
9) NO CONDOMINIUM UNIT SHALL BE DIVIDED OR ADJUSTED WITHOUT COMPLYING WITH PROVISIONS OF THE BUILDING CODES APPROVED BY VALLEY COUNTY.
10) EACH UNIT SHALL BE CONSTRUCTED TO ALLOW EACH OWNER INGRESS AND EGRESS TO THAT OWNER'S UNIT FROM THE COMMON AREA WITHOUT PASSING THROUGH ANOTHER OWNER'S UNIT OR APPROPRIATE EASEMENTS SHALL BE GRANTED PROVIDING INGRESS AND EGRESS TO THE OWNERS UNIT AND THE PLAT SHALL BE AMENDED ACCORDINGLY.
11) GENERAL COMMON AREA SHALL BE OWNED IN COMMON BY ALL OWNERS OF THE UNITS, AND NO OWNER MAY BRING ANY ACTION FOR PARTITION THEREOF. EACH OWNER SHALL HAVE THE NON-EXCLUSIVE RIGHT TO USE AND ENJOY THE COMMON AREAS.
12) MAINTENANCE AND WEED CONTROL PURSUANT TO IDAHO CODE SECTION 22-2407 FOR ALL LOTS/COMMON AREA SHALL BE THE RESPONSIBILITY OF THE SUBDIVIDER UNTIL THE UNITS ARE SOLD AND THEREAFTER IS THE RESPONSIBILITY OF THE ALPINE STORAGE CONDOMINIUMS ASSOCIATION, INC.
13) NO ADDITIONAL DOMESTIC WATER SUPPLIES SHALL BE INSTALLED BEYOND THE WATER SYSTEMS APPROVED IN ANY SANITARY RESTRICTION RELEASE.
14) THE VALLEY COUNTY BOARD OF COMMISSIONERS HAVE THE SOLE DISCRETION TO SET LEVEL OF SERVICE FOR ANY PUBLIC ROAD; THE LEVEL OF SERVICE CAN BE CHANGED.
15) ALL LIGHTING MUST BE DARK SKY COMPLIANT.
16) SURROUNDING LAND USES ARE SUBJECT TO CHANGE.
17) FEMA FLOOD PANEL(S): 16085C0689 (EFFECTIVE 02/01/2019)
FLOOD DESIGNATION: ZONE X (AREA OF MINIMAL FLOOD HAZARD)
FLOOD ZONES ARE SUBJECT TO CHANGE BY FEMA AND ALL LAND WITHIN A FLOODWAY OR FLOODPLAIN IS REGULATED BY TITLE 9 AND TITLE 11 OF THE VALLEY COUNTY CODE.
18) THIS CONDOMINIUM PLAT IS SUBJECT TO A BLANKET IDAHO POWER, POWER LINE EASEMENT AS DESCRIBED IN I.N. 67342.

SHEET INDEX

1. ABBREVIATIONS, BASIS OF BEARING, BOUNDARY DETAILS, HEALTH CERTIFICATE, LEGEND, NARRATIVE, PLAT NOTES, REFERENCES
2. BUILDING 2 DIMENSIONS
3. BUILDING 1 DIMENSIONS
4. ELEVATION PROFILES
5. ELEVATION PROFILES
6. ELEVATION PROFILES
7. CERTIFICATE OF OWNERS
8. APPROVALS AND CERTIFICATIONS

DRAFT COPY
09-25-2026

PROFESSIONAL LAND SURVEYOR LICENSED 19826 STATE OF IDAHO CHAD LEATHERMAN

LR Geo
A SURVEYING & MAPPING COMPANY
1225 N. MAIN ST. | MERIDIAN, IDAHO 83642
208.519.5900 | www.lr-geo.com

BOOK _____ PAGE _____

ALPINE STORAGE CONDOMINIUMS

BUILDING 2 DETAIL

SCALE: 1" = 10'

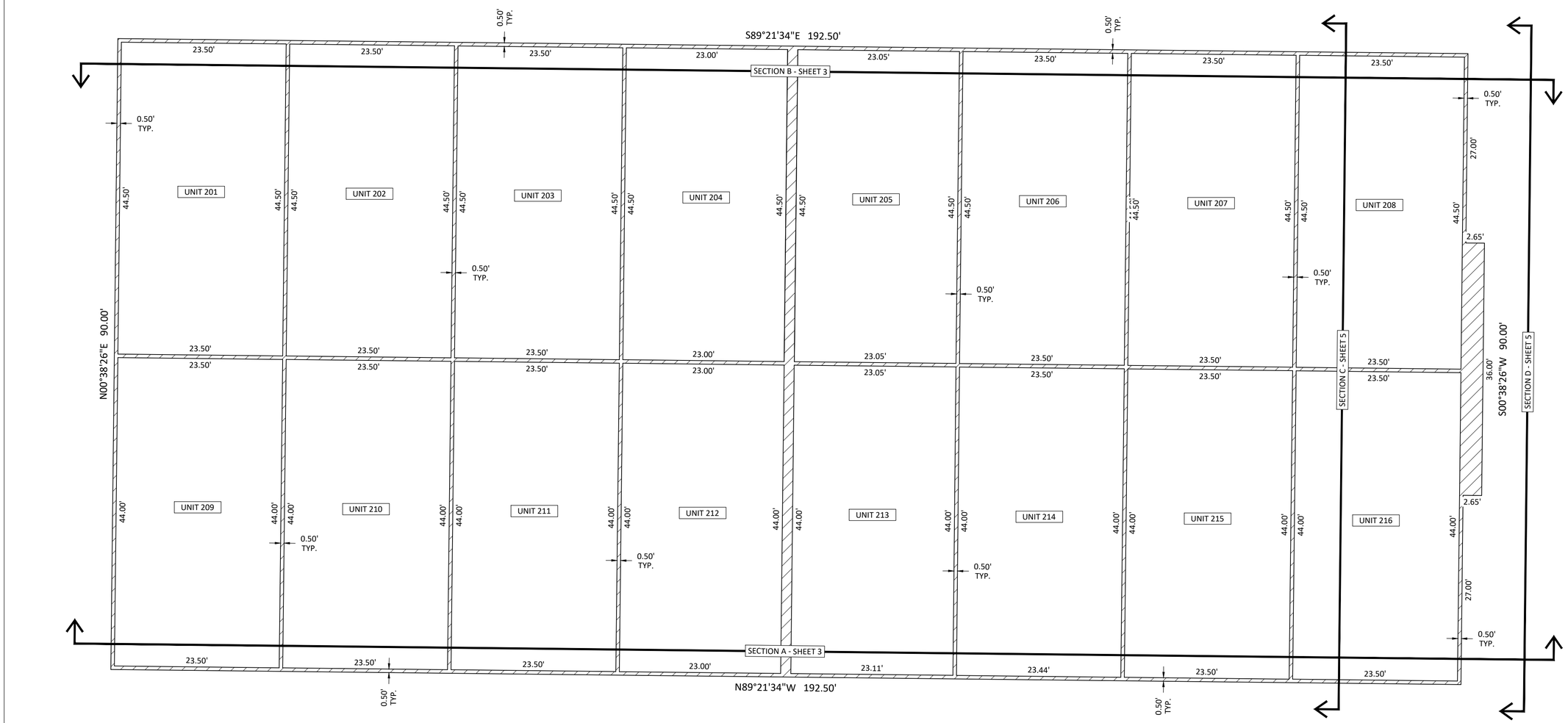

DRAFT COPY
09-25-2026

PROFESSIONAL LAND SURVEYOR
LICENSED
19826
STATE OF IDAHO
CHAD LEATHERMAN

LR Geo
A SURVEYING & MAPPING COMPANY
1225 N. MAIN ST. | MERIDIAN, IDAHO 83642
208.519.5900 | www.lr-geo.com

BOOK _____ PAGE _____

ALPINE STORAGE CONDOMINIUMS

BUILDING 1 DETAIL

SCALE: 1" = 10'

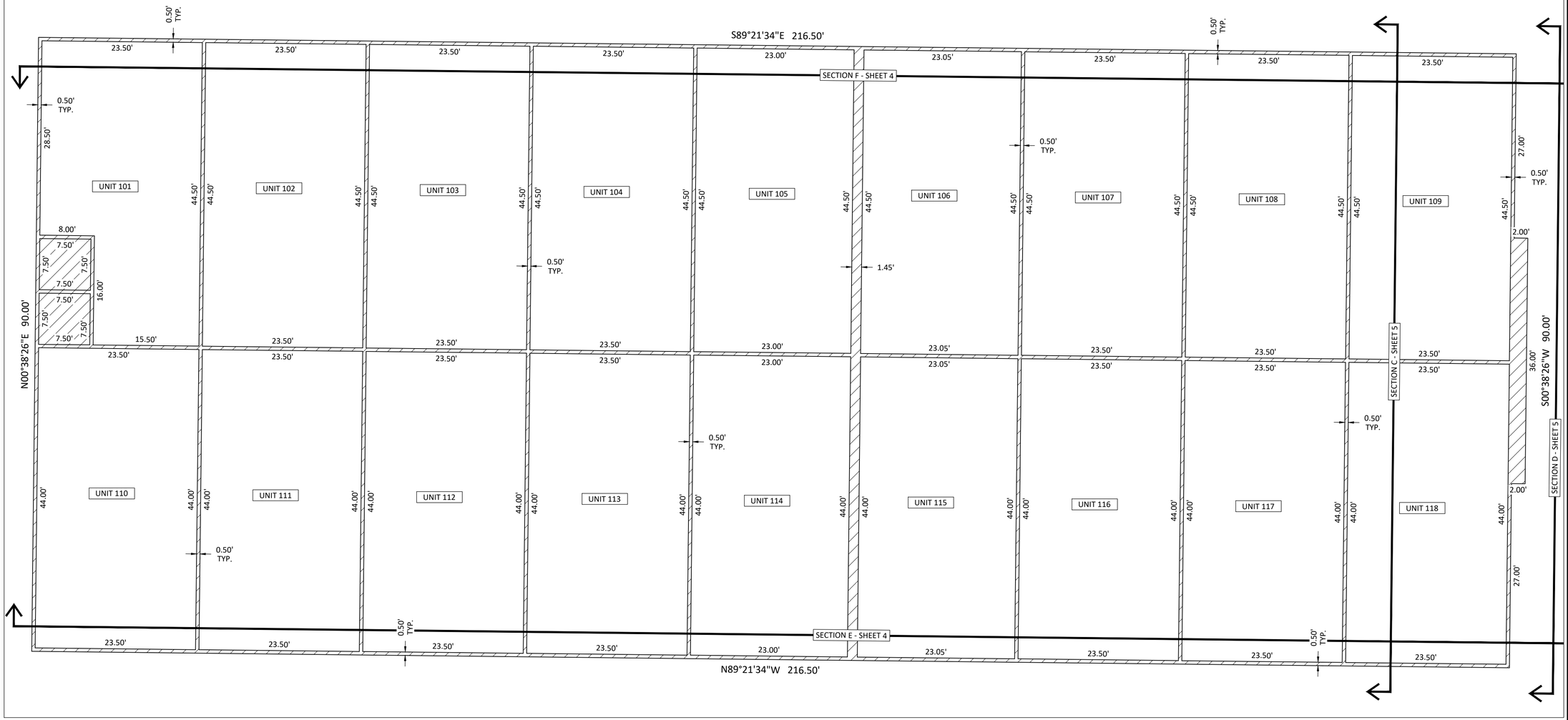

DRAFT COPY
09-25-2026

PROFESSIONAL LAND SURVEYOR LICENSED 19826 STATE OF IDAHO CHAD LEATHERMAN

LR Geo
A SURVEYING & MAPPING COMPANY
1225 N. MAIN ST. | MERIDIAN, IDAHO 83642
208.519.5900 | www.lr-geo.com

BOOK _____ PAGE _____

ALPINE STORAGE CONDOMINIUMS

ELEVATION PROFILE

SCALE: 1" = 10'

SECTION A

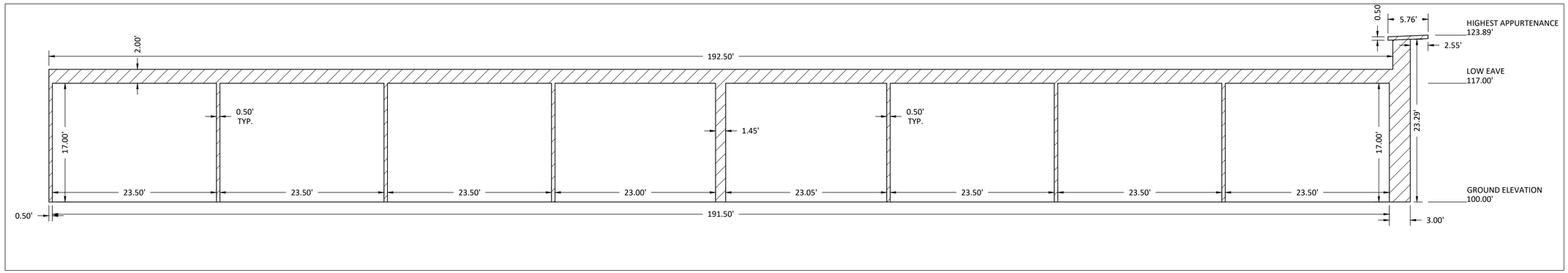

SECTION B

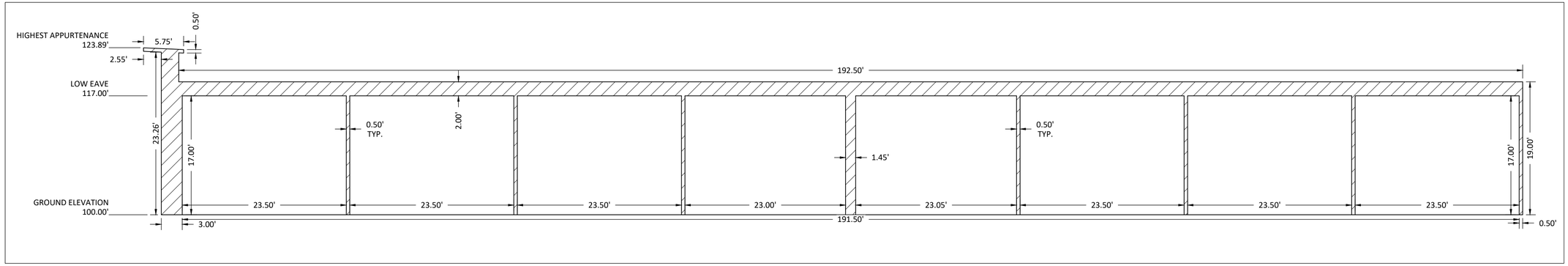

DRAFT COPY
09-25-2026

PROFESSIONAL LAND SURVEYOR
LICENSED
19826
STATE OF IDAHO
CHAD LEATHERMAN

LR Geo
A SURVEYING & MAPPING COMPANY
1225 N. MAIN ST. | MERIDIAN, IDAHO 83642
208.519.5900 | www.lr-geo.com

ALPINE STORAGE CONDOMINIUMS

ELEVATION PROFILE

SCALE: 1" = 10'

SECTION C

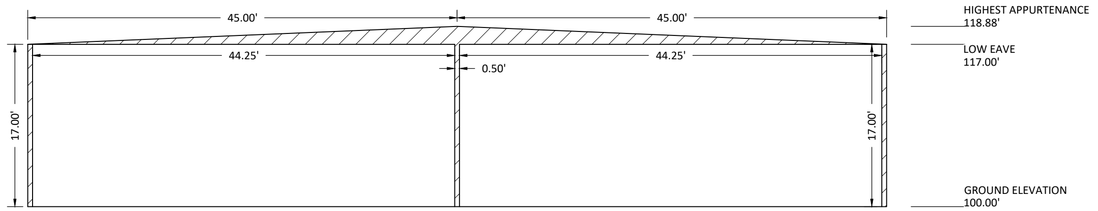

SECTION D

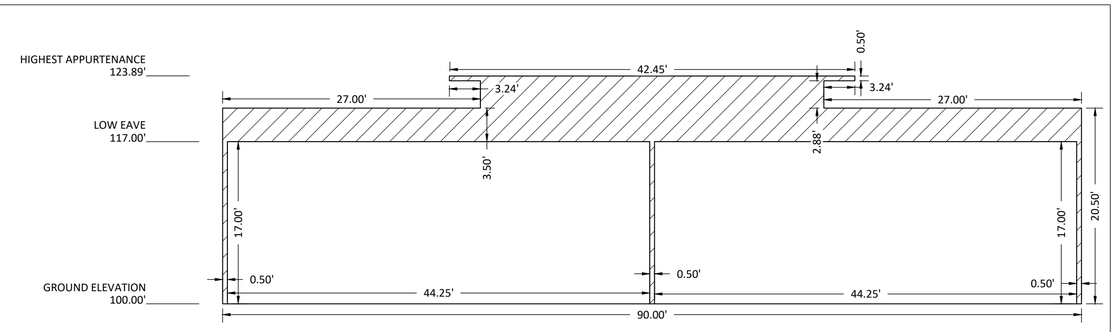

DRAFT COPY
09-25-2026

PROFESSIONAL LAND SURVEYOR LICENSED 19826 STATE OF IDAHO CHAD LEATHERMAN

LR Geo
A SURVEYING & MAPPING COMPANY
1225 N. MAIN ST. | MERIDIAN, IDAHO 83642
208.519.5900 | www.lr-geo.com

BOOK _____ PAGE _____

ALPINE STORAGE CONDOMINIUMS

ELEVATION PROFILE

SCALE: 1" = 10'

SECTION E

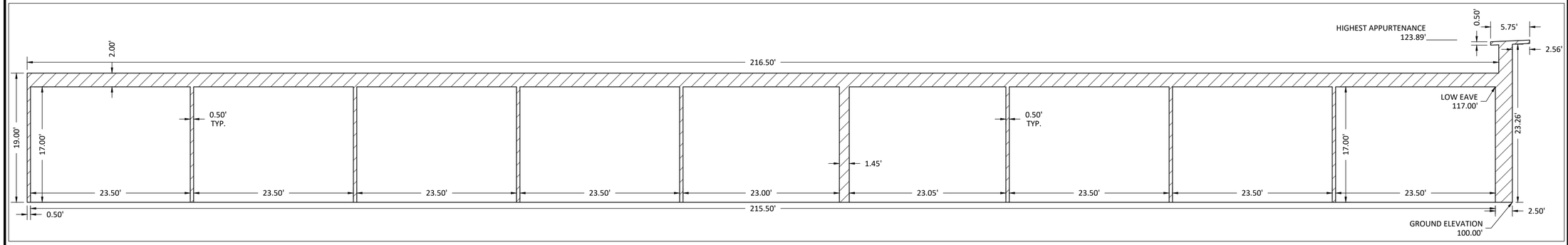

SECTION F

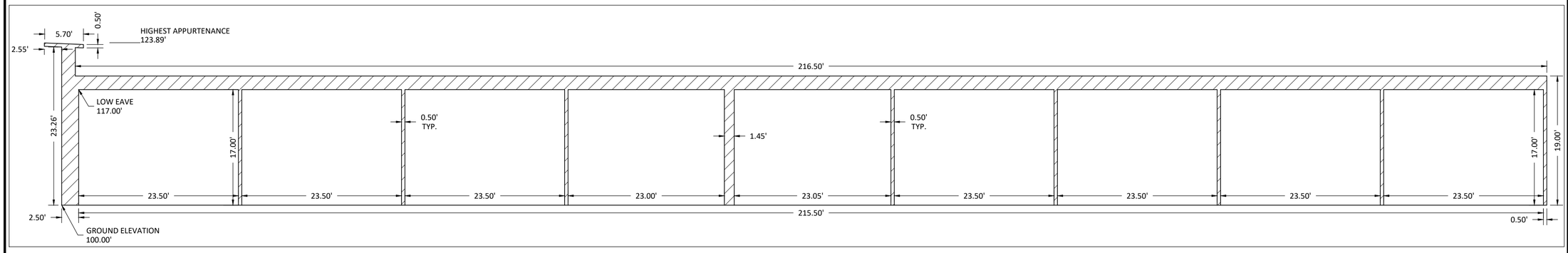

DRAFT COPY
09-25-2026

PROFESSIONAL LAND SURVEYOR LICENSED 19826 STATE OF IDAHO CHAD LEATHERMAN

LR Geo
A SURVEYING & MAPPING COMPANY
1225 N. MAIN ST. | MERIDIAN, IDAHO 83642
208.519.5900 | www.lr-geo.com

ALPINE STORAGE CONDOMINIUMS

CERTIFICATE OF OWNERS

KNOW ALL MEN BY THESE PRESENTS, THAT ALPINE STORAGE CONDOS LLC, AN IDAHO LIMITED LIABILITY COMPANY, DOES HEREBY CERTIFY THAT THEY ARE THE OWNER OF THE REAL PROPERTY AS DESCRIBED BELOW AND IT IS THEIR INTENTION TO CREATE A PROJECT INCLUDING SAID REAL PROPERTY IN THIS CONDOMINIUM PLAT. THE OWNER ALSO HEREBY CERTIFIES THAT THEY CONSENT TO THE RECORDATION OF DOCUMENTS PURSUANT TO TITLE 55, CHAPTER 15 OF IDAHO CODE AND THAT THIS PLAT COMPLIES WITH IDAHO CODE 50-1334 (2):

A PARCEL OF LAND, LYING WITHIN THE SOUTHEAST QUARTER OF THE SOUTHEAST QUARTER OF SECTION 16, TOWNSHIP 18 NORTH, RANGE 3 EAST, BOISE MERIDIAN, VALLEY COUNTY, IDAHO, BEING MORE PARTICULARLY DESCRIBED AS FOLLOWS:

COMMENCING AT THE SECTION CORNER COMMON TO SECTIONS 15, 16, 21, AND 22, MONUMENTED BY AN ALUMINUM CAP AS DESCRIBED IN CORNER RECORD INSTRUMENT NUMBER 418486, FROM WHICH THE NORTH QUARTER CORNER COMMON TO SECTIONS 15 AND 16, MONUMENTED BY AN ALUMINUM CAP AS DESCRIBED IN CORNER RECORD INSTRUMENT NUMBER 461159, BEARS NORTH 00°38'30" EAST, 2,642.31 FEET,
THENCE ALONG THE BOUNDARY COMMON TO SAID SECTIONS 15 AND 16, NORTH 00°38'30" EAST, 247.67 FEET TO THE POINT OF BEGINNING;

THENCE NORTH 89°26'20" WEST, 336.32 FEET;

THENCE NORTH 00°37'22" EAST, 363.92 FEET;

THENCE SOUTH 89°34'12" EAST, 151.63 FEET;

THENCE SOUTH 89°15'21" EAST, 184.81 FEET;

THENCE SOUTH 00°38'30" WEST, 363.67 FEET TO THE POINT OF BEGINNING.

CONTAINING 122,452 SQUARE FEET OR 2.811 ACRES, MORE OR LESS.

END OF DESCRIPTION.

IT IS THE INTENTION OF THE UNDERSIGNED TO HEREBY INCLUDE THE ABOVE DESCRIBED PROPERTY IN THIS PLAT. THE PUBLIC UTILITY, IRRIGATION AND DRAINAGE EASEMENTS ON THIS PLAT ARE NOT DEDICATED TO THE PUBLIC, BUT THE RIGHT OF ACCESS TO, AND USE OF, THESE EASEMENTS IS HEREBY RESERVED FOR PUBLIC UTILITIES, DRAINAGE AND FOR ANY OTHER USES AS MAY BE DESIGNATED HEREON AND NO PERMANENT STRUCTURES OTHER THAN FOR SAID USES ARE TO BE ERECTED WITHIN THE LIMITS OF SAID EASEMENTS.

THE OWNER(S) HEREBY CERTIFY THAT SURFACE WATER FOR IRRIGATION IS NOT REASONABLY AVAILABLE, PER SECTION 67-6537, IDAHO CODE, AND THE REQUIREMENTS OF SECTION 31-3805, IDAHO CODE, ARE NOT APPLICABLE.

By: _____
DOUG MILLER
MEMBER, ALPINE STORAGE CONDOS, LLC, AN IDAHO LIMITED LIABILITY COMPANY

ACKNOWLEDGEMENT

STATE OF IDAHO)
) SS
COUNTY OF _____)

ON THIS _____ DAY OF _____, 20__ BEFORE ME, THE UNDERSIGNED, A NOTARY PUBLIC IN AND OF SAID STATE, PERSONALLY APPEARED DOUG MILLER, KNOWN OR IDENTIFIED TO ME TO A MEMBER OF ALPINE STORAGE CONDOS, LLC, THE PERSON WHO EXECUTED THE INSTRUMENT ON BEHALF OF SAID LIMITED LIABILITY COMPANY, AND ACKNOWLEDGED TO ME THAT ALPINE STORAGE CONDOS, LLC EXECUTED THE SAME.

IN WITNESS WHEREOF, I HAVE HEREUNTO SET MY HAND AND AFFIXED MY SEAL, THE DAY AND YEAR IN THIS CERTIFICATE FIRST ABOVE WRITTEN.

_____
NOTARY PUBLIC

RESIDING AT _____

COMMISSION EXPIRES _____

DRAFT COPY
09-25-2026

PROFESSIONAL LAND SURVEYOR
LICENSED
19826
STATE OF IDAHO
CHAD LEATHERMAN

LR Geo
A SURVEYING & MAPPING COMPANY
1225 N. MAIN ST. | MERIDIAN, IDAHO 83642
208.519.5900 | www.lr-geo.com

ALPINE STORAGE CONDOMINIUMS

CERTIFICATE OF VALLEY COUNTY SURVEYOR

I, THE UNDERSIGNED COUNTY SURVEYOR FOR VALLEY COUNTY, IDAHO, DO HEREBY CERTIFY THAT THE ALPINE STORAGE CONDOMINIUMS IS IN COMPLIANCE WITH TITLE 50, CHAPTER 13, IDAHO CODE, RELATING TO PLATS, SURVEYS AND CONDOMINIUMS, AND IS ALSO IN COMPLIANCE WITH THE VALLEY COUNTY SUBDIVISION REGULATIONS RELATING TO PLATS.

_____
VALLEY COUNTY SURVEYOR

_____
DATE

APPROVAL OF THE VALLEY COUNTY PLANNING AND ZONING COMMISSION

THE PLAT OF ALPINE STORAGE CONDOMINIUMS IS HEREBY ACCEPTED AND APPROVED THIS _____ DAY OF _____, 20____, BY THE VALLEY COUNTY PLANNING AND ZONING COMMISSION.

_____
CHAIRMAN

_____
DATE

APPROVAL OF THE BOARD OF VALLEY COUNTY COMMISSIONERS

THE PLAT OF ALPINE STORAGE CONDOMINIUMS IS HEREBY ACCEPTED AND APPROVED THIS _____ DAY OF _____, 20____, BY THE VALLEY COUNTY COMMISSIONERS.

_____
CHAIRMAN

_____
DATE

CERTIFICATE OF VALLEY COUNTY TREASURER

I, THE UNDERSIGNED COUNTY TREASURER IN AND FOR THE COUNTY OF VALLEY, IDAHO, PER THE REQUIREMENTS OF I.C. 50-1308, DO HEREBY CERTIFY THAT ANY AND ALL CURRENT AND/OR DELINQUENT COUNTY PROPERTY TAX FOR THE PROPERTY INCLUDED IN THE PLAT OF ALPINE STORAGE CONDOMINIUMS HAVE BEEN PAID IN FULL.
THIS CERTIFICATION IS VALID FOR THE NEXT THIRTY (30) DAYS ONLY.

_____
VALLEY COUNTY TREASURER

DATE:_____

CERTIFICATE OF SURVEYOR

THIS IS TO CERTIFY THAT I, CHAD LEATHERMAN, A PROFESSIONAL LAND SURVEYOR, LICENSED BY THE STATE OF IDAHO, SUPERVISED THE SURVEY OF LAND AS DESCRIBED IN THE CERTIFICATE OF OWNERS AND THAT THIS PLAT IS A TRUE AND CORRECT REPRESENTATION OF SAID SURVEY, DESIGNATED HEREIN AS "ALPINE STORAGE CONDOMINIUMS", AND THAT IT WAS COMPLETED IN ACCORDANCE WITH THE CURRENT LAWS OF THE STATE OF IDAHO RELATING TO PLATS, SURVEYS, AND CONDOMINIUMS, AND WITH THE CORNER PERPETUATION AND FILING LAW.

AGENCY REVIEW
09-25-2026

PROFESSIONAL LAND SURVEYOR
LICENSED
19826
STATE OF IDAHO
CHAD LEATHERMAN

LR Geo
A SURVEYING & MAPPING COMPANY
1225 N. MAIN ST. | MERIDIAN, IDAHO 83642
208.519.5900 | www.lr-geo.com

© COPYRIGHT 2025 CIVIL SITE WORKS LLC. THIS INSTRUMENT IS THE PROPERTY OF CIVIL SITE WORKS LLC. ANY REPRODUCTION, REUSE, OR MODIFICATION OF THIS INSTRUMENT OR ITS CONTENTS WITHOUT EXPRESS WRITTEN PERMISSION OF CIVIL SITE WORKS LLC IS STRICTLY PROHIBITED.

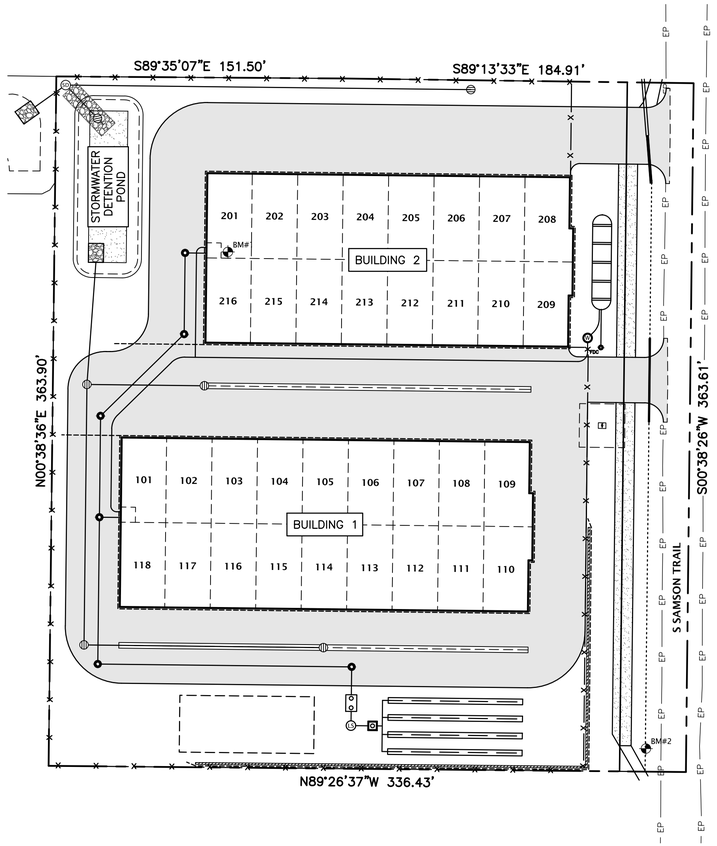

SURVEY DATUM

ALL ELEVATIONS SHOWN ARE NORTH AMERICAN VERTICAL DATUM OF 1988 (NAVD 88).

BENCHMARK #1
1/2" REBAR
ELEVATION=5068.80'

BENCHMARK #2
1/2" REBAR
ELEVATION=5077.41'

CIVIL IMPROVEMENT PLANS FOR
ALPINE STORAGE
A PORTION OF LAND LYING WITHIN THE SE 1/4 OF THE SE 1/4 OF SECTION 16 TOWNSHIP 18N, RANGE 3E, BOISE MERIDIAN VALLEY COUNTY, IDAHO
2025

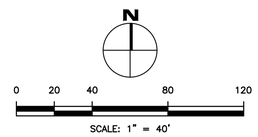

SHEET INDEX

C0.0	COVER SHEET/NOTES
C1.0	SITE PLAN
C1.1	UTILITY PLAN
C2.0	GRADING/DRAINAGE/STORMWATER PLAN
C3.0	TYPICAL DETAILS
ESC1.0	EROSION AND SEDIMENT CONTROL PLAN

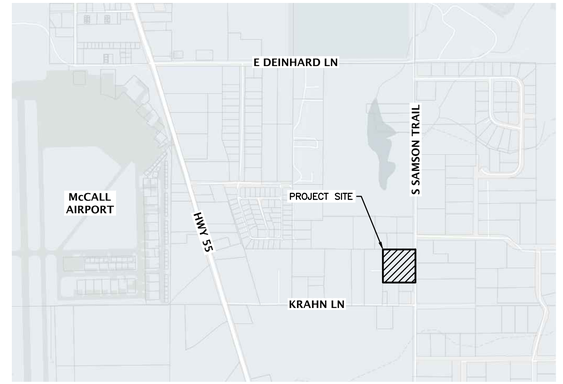

VICINITY MAP
NOT TO SCALE

OWNER/APPLICANT

CAM ECHANIS

ARCHITECT

JEFFREY HATCH
HATCH DESIGN ARCHITECTURE
200 W 36TH STREET
BOISE, ID 83714
(208) 475-3204

CIVIL ENGINEER

CORINNE GRAHAM, PE
CIVIL SITE WORKS LLC
PO BOX 6059
BOISE, ID 83707
(208) 946-3874

SURVEYOR

NATHAN DANG, PLS
ACCURATE SURVEYING & MAPPING
1520 W. WASHINGTON STREET
BOISE, ID 83702
(208) 488-4227

LEGEND

- PROPOSED BOUNDARY
- 12"SD> PROPOSED STORM DRAIN PIPE
- <4"SS PROPOSED SEWER SERVICE LINE
- 1"W PROPOSED WATER SERVICE LINE
- PROPOSED STORM DRAIN INLETS
- PROPOSED SEPTIC TANK
- SANITARY SEWER CLEANOUT
- W PROPOSED WELL
- FDC FIRE DEPARTMENT CONNECTION
- OHP EXISTING OVERHEAD POWER
- EP EXISTING EDGE OF PAVEMENT
- x x x EXISTING FENCE
- 5070 PROPOSED MAJOR CONTOUR (5')
- 5072 PROPOSED MINOR CONTOUR (1')
- 5070 EXISTING MAJOR CONTOUR (5')
- 5072 EXISTING MINOR CONTOUR (1')
- 2.00% DRAINAGE ARROW WITH SLOPE

SITE DATA

SITE AREA = ±2.81 ACRES

LAND USE ZONE

EXISTING: CC (COMMUNITY COMMERCIAL)

BUILDING AREA	36,864 SF	30.1%
IMPERVIOUS AREA	41,297 SF	33.7%
LANDSCAPE AREA	31,579 SF	25.8%
PUBLIC RIGHT-OF-WAY	12,729 SF	10.4%

% BUILDING COVERAGE = 33.6% (EXCLUDES PUBLIC R/W)

BUILDING SETBACKS	CC ZONE	PROPOSED
FRONT SETBACK	5 FEET	20 FEET
SIDE SETBACK	5 FEET	10 FEET
REAR SETBACK	10 FEET	10 FEET

NOTICE TO CONTRACTORS

CONSTRUCTION CONTRACTOR AGREES THAT IN ACCORDANCE WITH GENERALLY ACCEPTED CONSTRUCTION PRACTICES, CONSTRUCTION CONTRACTOR WILL BE REQUIRED TO ASSUME SOLE AND COMPLETE RESPONSIBILITY FOR JOB SITE CONDITIONS DURING THE COURSE OF CONSTRUCTION OF THE PROJECT, INCLUDING SAFETY OF ALL PERSONS AND PROPERTY; THAT THIS REQUIREMENT SHALL BE MADE TO APPLY CONTINUOUSLY AND NOT BE LIMITED TO NORMAL WORKING HOURS, AND CONSTRUCTION CONTRACTOR FURTHER AGREES TO DEFEND, INDEMNIFY AND HOLD THE CITY OF McCALL AND THE DESIGN CONSULTANT HARMLESS FROM ANY AND ALL LIABILITY, REAL OR ALLEGED, IN CONNECTION WITH THE PERFORMANCE OF WORK ON THIS PROJECT.

UNAUTHORIZED CHANGES OR USES: THE DESIGN CONSULTANT PREPARING THESE PLANS WILL NOT BE RESPONSIBLE FOR, OR LIABLE FOR, UNAUTHORIZED CHANGES TO OR USES OF THESE PLANS. ALL CHANGES TO THE PLANS MUST BE IN WRITING AND MUST BE APPROVED BY THE PREPARER OF THESE PLANS.

811 Know what's below. Call before you dig.

CALL BEFORE YOU DIG

CALL DIGLINE INC.
PRIOR TO COMMENCING
UNDERGROUND WORK
(208) 342-1585

GENERAL CONSTRUCTION NOTES

1. ALL WORK SHALL BE DONE IN ACCORDANCE WITH THE CURRENT EDITION OF THE IDAHO STANDARDS FOR PUBLIC WORKS CONSTRUCTION, AND ANY CITY OF McCALL SUPPLEMENTAL SPECIFICATIONS AND DRAWINGS.
2. ALL REFERENCE MADE TO THE ISPWC SHALL REFER TO THE CURRENT EDITION. THE CONTRACTOR SHALL HAVE AT LEAST ONE (1) COPY OF THE ISPWC ON-SITE FOR REFERENCE AT ALL TIMES DURING CONSTRUCTION.
3. THE LOCATIONS OF EXISTING UNDERGROUND UTILITIES ARE SHOWN IN AN APPROXIMATE WAY ONLY. THE CONTRACTOR SHALL DETERMINE THE EXACT LOCATION OF ALL EXISTING UTILITIES BEFORE COMMENCING WORK. THE CONTRACTOR ASSUMES ALL RESPONSIBILITY FOR ANY AND ALL DAMAGES CAUSED BY HIS FAILURE TO EXACTLY LOCATE AND PRESERVE ANY AND ALL UNDERGROUND UTILITIES. CONTACT DIGLINE 48 HOURS PRIOR TO DIGGING.
4. ONLY PLAN SETS STAMPED "APPROVED FOR CONSTRUCTION" AND SIGNED BY THE CITY ENGINEER OR HIS AUTHORIZED REPRESENTATIVE SHALL BE USED BY THE PROJECT CONTRACTOR(S). USE OF ANY PLANS ON THE JOB WITHOUT THE "APPROVED FOR CONSTRUCTION" STAMP SHALL BE GROUNDS FOR THE ISSUANCE OF A STOP WORK ORDER.
5. ANY CHANGE FROM THE PLANS SHALL BE APPROVED BY THE DESIGN ENGINEER AND THE CITY OF McCALL.
6. ALL CONTRACTORS, SUBCONTRACTORS AND/OR UTILITY CONTRACTORS SHALL ATTEND A PRE-CONSTRUCTION CONFERENCE WITH THE CITY OF McCALL PRIOR TO START OF WORK.
7. THE CONTRACTOR IS RESPONSIBLE FOR ANY DAMAGE TO PRIVATE OR PUBLIC PROPERTY AND SHALL RESTORE ALL SURFACES TO A CONDITION EQUAL TO OR BETTER THAN EXISTED PRIOR TO CONSTRUCTION.
8. THE CONTRACTOR SHALL OBTAIN ALL NECESSARY CONSTRUCTION PERMITS PRIOR TO START OF WORK. OWNER SHALL OBTAIN BUILDING PERMIT AND SHALL PAY ALL PERMIT FEES ASSOCIATED WITH CONSTRUCTION.
9. THE CONTRACTOR SHALL MAINTAIN ALL EXISTING DRAINAGE FACILITIES WITHIN THE CONSTRUCTION AREA UNTIL THE DRAINAGE IMPROVEMENTS ARE IN PLACE AND FUNCTIONING.
10. ALL MATERIAL FURNISHED ON OR FOR THE PROJECT MUST MEET THE MINIMUM REQUIREMENTS OF THE APPROVING AGENCIES OR AS SET FORTH HEREIN, WHICHEVER IS MORE RESTRICTIVE. CONTRACTORS MUST FURNISH PROOF THAT ALL MATERIALS INSTALLED ON THIS PROJECT MEET THESE REQUIREMENTS AT THE REQUEST OF THE APPROVING AGENCY AND/OR THE DESIGN ENGINEER.
11. ALL CONTRACTORS WORKING WITHIN THE PUBLIC ROAD RIGHT-OF-WAY ARE REQUIRED TO SECURE AN APPROACH PERMIT FROM THE VALLEY COUNTY ROAD AND BRIDGE DEPARTMENT.
12. CLEARING AND GRUBBING SHALL CONFORM TO ISPWC SECTION 201. EXCAVATION AND EMBANKMENT SHALL CONFORM TO ISPWC SECTION 202 WITH CLASS B COMPACTION.
13. CONSTRUCTION DEWATERING SHALL COMPLY WITH ISPWC SECTION 205. THE CONTRACTOR SHALL BE RESPONSIBLE FOR REMOVAL OF SEDIMENT DEPOSITED AS A RESULT OF DEWATERING ACTIVITIES. IF THE PROJECT WILL GENERATE CONSTRUCTION WASTEWATER THAT DISCHARGES TO STATE OR FEDERAL WATERS, A SHORT TERM ACTIVITY EXEMPTION FROM DEQ OR EQUIVALENT SHALL BE OBTAINED BY THE CONTRACTOR.
14. TRENCH EXCAVATION, BEDDING, AND BACKFILL SHALL CONFORM TO THE ISPWC DIVISION 300. BEDDING SHALL BE A CLASS A-1 BEDDING SYSTEM. IF SOFT, UNSTABLE, OR UNSUITABLE TRENCH BOTTOM MATERIAL IS ENCOUNTERED, PIPE BEDDING SHALL BE TYPE II PER ISPWC SECTION 304. BACKFILL SHALL COMPLY WITH ISPWC SECTION 306 FOR TYPE A BACKFILL AND TYPE A-1 COMPACTION.
15. CONTRACTOR SHALL RETAIN AN INDEPENDENT TESTING LABORATORY FOR FIELD QUALITY CONTROL OF ALL BACKFILL AND ASPHALT. FIELD QUALITY CONTROL SHALL BE IN ACCORDANCE WITH ISPWC SECTION 204.3.4 AND SECTION 810.3.13. COPIES OF ALL TEST RESULTS SHALL BE PROVIDED TO THE PROJECT ENGINEER FOR REVIEW.
16. ALL UNSUITABLE MATERIAL SUCH AS SOILS, TRASH, AND VEGETATION SHALL BECOME THE PROPERTY OF THE CONTRACTOR AND PROPERLY DISPOSED OF OFF SITE.
17. THE CONTRACTOR SHALL OBTAIN A COPY OF THE GEOTECHNICAL SOILS REPORT PREPARED BY ATLAS TECHNICAL CONSULTANTS LLC DATED AUGUST 18, 2023 FILE NO. B230940g.

SEWER

1. ALL SEWER CONSTRUCTION SHALL BE DONE IN ACCORDANCE WITH THE CURRENT EDITION OF THE IDAHO STANDARDS FOR PUBLIC WORKS CONSTRUCTION. SEPTIC SYSTEM INSTALLATION SHALL CONFORM TO THE IDAHO DEQ TECHNICAL GUIDANCE MANUAL FOR INDIVIDUAL AND SUBSURFACE SEWAGE DISPOSAL SYSTEMS.
2. ALL SEWER PIPE AND FITTINGS SHALL BE POLYVINYL CHLORIDE (PVC) CONFORMING TO THE REQUIREMENTS OF ASTM D-3034, SDR-35.
3. SEWER SERVICE LINES SHALL CONFORM TO ISPWC SD-511 AND MARKED PER ISPWC SD-512 WITH A GREEN T-POST. SEWER SERVICES SHALL BE CONSTRUCTED AT A MINIMUM OF 1% SLOPE. SERVICE LINE MARKERS SHALL REMAIN IN PLACE DURING CONSTRUCTION AND BE PRESENT FOR FINAL INSPECTION.
4. ALL SEWER SERVICES SHALL BE BEDDED PER THE REQUIREMENTS OF TYPE I BEDDING, EXCEPT THAT BEDDING MATERIAL SHALL BE SELECT ¾-INCH MAXIMUM CRUSHED GRAVEL CHIPS. ALL BEDDING SHALL BE THOROUGHLY SHOVEL-SLICED UNDER THE PIPE AT A DEPTH OF 6" UNDER THE PIPE AND 12" OVER THE TOP.
5. GROUNDWATER LEVELS SHALL BE MAINTAINED BELOW THE TRENCH BOTTOM AT ALL TIMES DURING CONSTRUCTION. GROUNDWATER SHALL NOT BE PERMITTED TO ENTER THE PIPELINE SYSTEM DURING CONSTRUCTION. GROUNDWATER SHALL NOT BE PERMITTED TO DISCHARGE INTO THE SEPTIC SYSTEM.
6. THE CONTRACTOR SHALL GUARANTEE ALL WORK FOR A PERIOD OF AT LEAST ONE-YEAR FOLLOWING THE FINAL ACCEPTANCE.
7. THE HORIZONTAL SEPARATION OF THE WATER AND SEWER SERVICES SHALL BE A MINIMUM OF SIX (6) FEET. WHERE IT IS NECESSARY FOR SEWER AND WATER TO CROSS EACH OTHER AND THE SEWER LINE IS LESS THAN 18 INCHES BELOW OR ABOVE THE WATER MAIN, THE SEWER LINE CROSSING SHALL BE P.V.C. PRESSURE PIPE CONFORMING TO AWWA C-900 OR ASTM D2241, FOR A DISTANCE OF 10' ON BOTH SIDES OF WATER LINE. ONE FULL LENGTH OF BOTH WATER MAIN AND SEWER LINE SHALL BE CENTERED OVER THE CROSSING POINT SO THAT ALL JOINTS WILL BE AS FAR FROM THE CROSSING AS POSSIBLE.

WATER

1. CONSTRUCTION OF THE WATER SYSTEM SHALL CONFORM TO THE STANDARDS IN THE "IDAHO RULES FOR PUBLIC DRINKING WATER SYSTEMS (IDAPA 58.01.08)", AND/OR THE CURRENT EDITION OF THE IDAHO STANDARDS FOR PUBLIC WORKS CONSTRUCTION.
2. WATER SERVICE CONNECTIONS SHALL BE POLYETHYLENE PIPE CONFORMING TO AWWA C-901, CLASS 250, SDR 9 CTS. SERVICES SHALL BE CONSTRUCTED IN CONFORMANCE WITH THE CITY MIDDLETON MODIFIED WATER SERVICE CONNECTION DETAIL.
3. ALL WATER MAINS AND SERVICES SHALL BE BEDDED IN REJECT SAND PER ISPWC SPECIFICATIONS. ALL BEDDING SHALL BE THOROUGHLY SHOVEL-SLICED UNDER THE PIPE.
4. ALL INSTALLED WATER LINES SHALL BE TESTED FOR LEAKAGE IN ACCORDANCE WITH SECTION 401.3.6 OF THE ISPWC FOLLOWING INSTALLATION OF ALL UTILITIES AND PRIOR TO PAVING. EACH METER SETTER SHALL BE OPENED TO BE SURE THAT THE SERVICE CORPORATION STOP IS OPEN AND THE SERVICE IS FUNCTIONAL PRIOR TO PAVING. A REPRESENTATIVE OF THE CITY MUST BE PRESENT MUST OBSERVE THE TESTING. ALL INSTALLED WATER LINES SHALL BE FLUSHED, DISINFECTED AND TESTED FOR BACTERIA IN ACCORDANCE WITH SECTION 401.3.9 OF THE ISPWC AND CITY OF MIDDLETON STANDARD CONSTRUCTION SPECIFICATIONS. A MINIMUM OF TWO PASSING "BACT-T" TESTS PER ISPWC AND AS MODIFIED BY THE CITY OF MIDDLETON STANDARD CONSTRUCTION SPECIFICATIONS ARE REQUIRED. THE WATER SYSTEM SHALL NOT BE OPENED TO THE CITY SYSTEM UNTIL THE CITY ISSUES AN INITIAL ACCEPTANCE OF THE SYSTEM.
5. THE CONTRACTOR SHALL GUARANTEE ALL WORK FOR A PERIOD OF AT LEAST A ONE-YEAR FOLLOWING THE CITY'S INITIAL ACCEPTANCE.
6. THE HORIZONTAL SEPARATION OF NON-POTABLE SERVICES AND POTABLE WATER SERVICES OR POTABLE WATER MAINS SHALL BE A MINIMUM OF SIX (6) FEET. WHERE IT IS NECESSARY FOR A POTABLE WATER MAIN AND NON-POTABLE WATER MAIN TO CROSS WITH LESS THAN EIGHTEEN (18) INCHES OF VERTICAL SEPARATION, THE CROSSING SHALL BE CONSTRUCTED IN ACCORDANCE WITH SECTION 542.07 OF THE IDAHO RULES FOR PUBLIC DRINKING WATER SYSTEMS (IDAPA 58.01.08) AND SECTION 430.02 OF THE WASTEWATER RULES (IDAPA 58.01.16).
7. ALL WATER WORKS COMPONENTS SHALL BE ANSI/NSF 61 CERTIFIED, AND MUST MEET ALL AWWA AND STANDARD REQUIREMENTS OF THE IDAHO RULES FOR PUBLIC DRINKING WATER SYSTEMS (IDAPA 58.01.08).

ROADWAY

1. SET THE TOPS OF ALL VALVE BOXES, STORM DRAIN STRUCTURES, AND SEWER CLEANOUTS FLUSH WITH THE SLOPE OF THE FINISHED ASPHALT GRADES.
2. PLACE ALL WATER VALVES, BLOW-OFFS, AND MANHOLES SO THAT THEY DO NOT CONFLICT WITH ANY CONCRETE CURB AND GUTTER, VALLEY GUTTER, OR SIDEWALK IMPROVEMENTS.
3. CONCRETE CONSTRUCTION SHALL CONFORM TO ISPWC SECTION 706 WITH CLASS 30 MPa (4000 PSI) CONCRETE.
4. PAVEMENT SECTION SUBBASE SHALL BE 6-INCH MINUS PITRUN SAND AND GRAVEL AT THE THICKNESS SPECIFIED ON THE PLANS AND CONFORM TO THE ISPWC SECTION 801.
5. PAVEMENT SECTION BASE COURSE SHALL BE 3/4-INCH MINUS, CRUSHED SAND AND GRAVEL, AT THE THICKNESS SPECIFIED ON THE PLANS AND CONFORM TO THE ISPWC SECTION 802.
6. PLANT MIX ASPHALT CONCRETE SHALL BE AT THE THICKNESS SPECIFIED ON THE PLANS AND CONFORM TO CLASS III PLANT MIX UNDER THE ISPWC SECTION 810 – PLANT MIX PAVEMENT.

GRADING/STORM DRAINAGE

1. ALL AREAS OF CONSTRUCTION SHALL BE STRIPPED. STRIPPING SHALL CONSIST OF REMOVING THE TOPSOIL HUMUS. STRIPPED MATERIALS SHALL BE PLACED OR STOCKPILED BY THE CONTRACTOR ON THE SITE AS SHOWN ON THE PLANS AND PER INSTRUCTION BY THE OWNER/DEVELOPER, OR HAULED OFF SITE TO AN APPROVED LOCATION.
2. THE CONTRACTOR SHALL REMOVE ALL OBSTRUCTIONS, BOTH ABOVE AND BELOW GROUND, AS REQUIRED FOR THE CONSTRUCTION OF THE PROPOSED IMPROVEMENTS. THIS SHALL INCLUDE CLEARING AND GRUBBING WHICH CONSISTS OF CLEARING THE GROUND SURFACE OF ALL TREES, STUMPS, BRUSH, SHRUBS, GRASS, WEEDS, FENCES, STRUCTURES, DEBRIS, RUBBISH, AND ANY OTHER MATERIALS THAT ARE UNSUITABLE FOR THE FOUNDATION OF PAVEMENTS AND STRUCTURES. ALL MATERIAL NOT SUITABLE FOR FUTURE USE ON SITE SHALL BE DISPOSED OF OFF-SITE.
3. AS SOON AS PRACTICAL AFTER COMPLETION OF ALL PAVING, THE CONTRACTOR SHALL REMOVE ALL DIRT, MUD, ROCK GRAVEL AND OTHER FOREIGN MATERIALS FROM THE PAVED SURFACE AND STORM DRAINAGE SYSTEM.
4. DESIGN ENGINEER OR HIS REPRESENTATIVE MUST INSPECT EXCAVATION AND THE MATERIALS BEING USED FOR CONFORMANCE WITH THE APPROVED PLANS. FINAL INSPECTION OF THE STORM DRAINAGE SYSTEM SHALL BE CONDUCTED FOLLOWING THE PAVING AND FINAL LANDSCAPING.

PROFESSIONAL ENGINEER LICENSED 16970 10-28-25 STATE OF IDAHO CORINNE M. GRAHAM

CSW CIVIL SITE WORKS
PO BOX 6059
BOISE, ID 83707
cgraham@cswengineering.com
(208) 946-3874

REV. NO.	DESCRIPTION	DATE

FILE NAME: 23005-C-COVER.DWG

DESIGNED:	C. GRAHAM
DRAWN:	C. GRAHAM
CHECKED:	C. GRAHAM
APPROVED:	C. GRAHAM

PREPARED FOR:
CAM ECHANIS

ALPINE STORAGE
450 S SAMSON TRAIL, McCALL, IDAHO
COVER SHEET

CSW PROJECT NO.	23005
DRAWING DATE	10/28/2025

C0.0

© COPYRIGHT 2025 CIVIL SITE WORKS LLC. THIS INSTRUMENT IS THE PROPERTY OF CIVIL SITE WORKS LLC. ANY REPRODUCTION, REUSE, OR MODIFICATION OF THIS INSTRUMENT OR ITS CONTENTS WITHOUT EXPRESS WRITTEN PERMISSION OF CIVIL SITE WORKS LLC IS STRICTLY PROHIBITED.

EXISTING CONDITIONS MAP FOR
ALPINE STORAGE
A PORTION OF LAND LYING WITHIN THE SE 1/4 OF THE SE 1/4 OF SECTION 16 TOWNSHIP 18 NORTH, RANGE 3 EAST, BOISE MERIDIAN VALLEY COUNTY, IDAHO

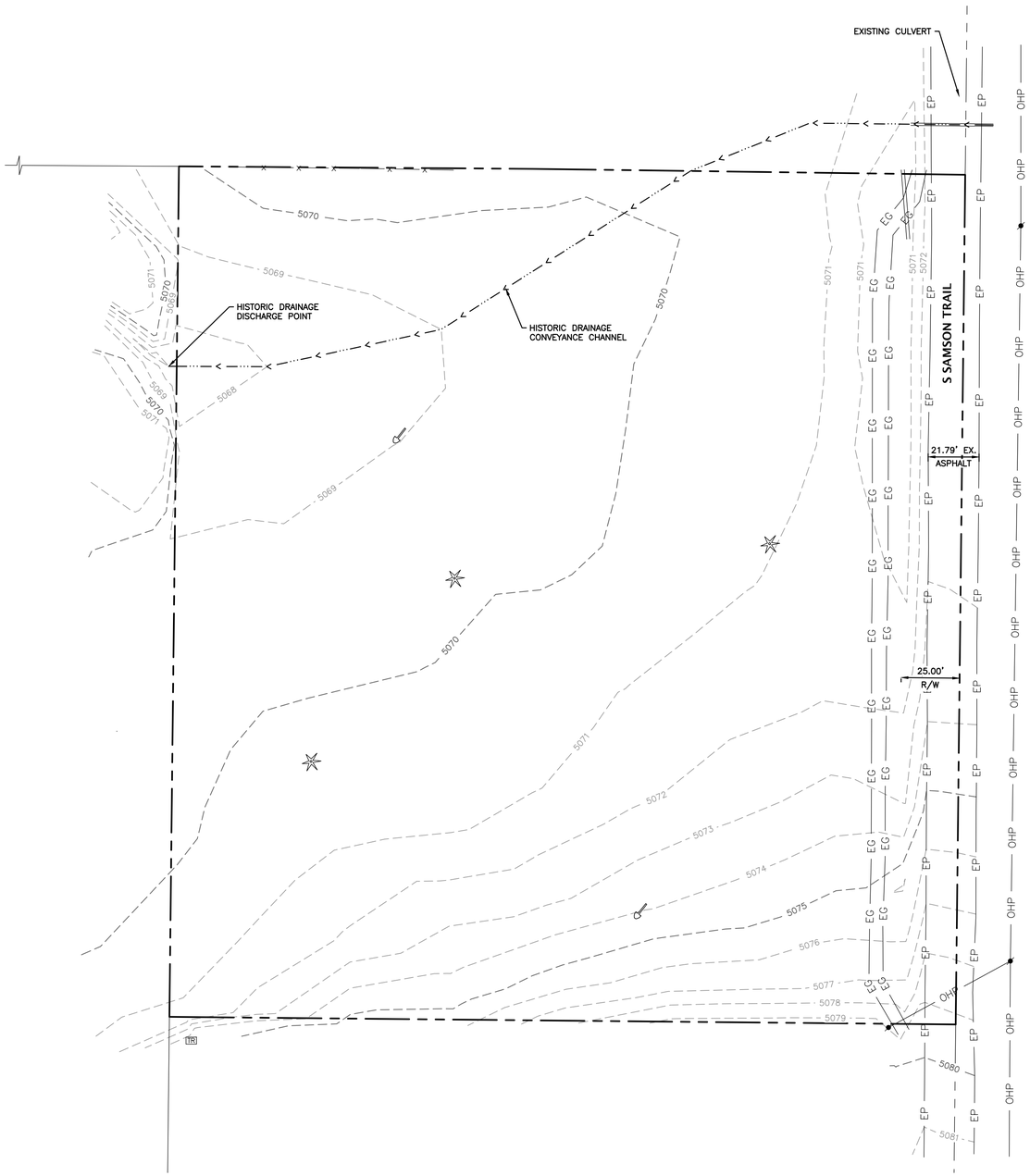

N

0 15 30 60 90

SCALE: 1" = 30'

LEGEND

- PROJECT BOUNDARY
- EXISTING OVERHEAD POWER
- EXISTING EDGE OF PAVEMENT
- EXISTING FENCE
- EXISTING TREE
- TEST PIT LOCATION
- EXISTING OVERHEAD POWER POLE
- EXISTING TRANSFORMER
- EXISTING MAJOR CONTOUR (5')
- EXISTING MINOR CONTOUR (1')

CIVIL SITE WORKS
PO BOX 6059
BOISE, ID 83707
cgraham@cswengineering.com
(208) 946-3874

REV. NO.	DESCRIPTION	DATE

FILE NAME: 23005-C-EX CONDITIONS.DWG

DESIGNED:	C. GRAHAM
DRAWN:	C. GRAHAM
CHECKED:	C. GRAHAM
APPROVED:	C. GRAHAM

PREPARED FOR:
CAM ECHANIS

ALPINE STORAGE
450 S SAMSON TRAIL, McCALL, IDAHO
EXISTING CONDITIONS MAP

CSW PROJECT NO.	23005
DRAWING DATE	10/28/2025

C1.0

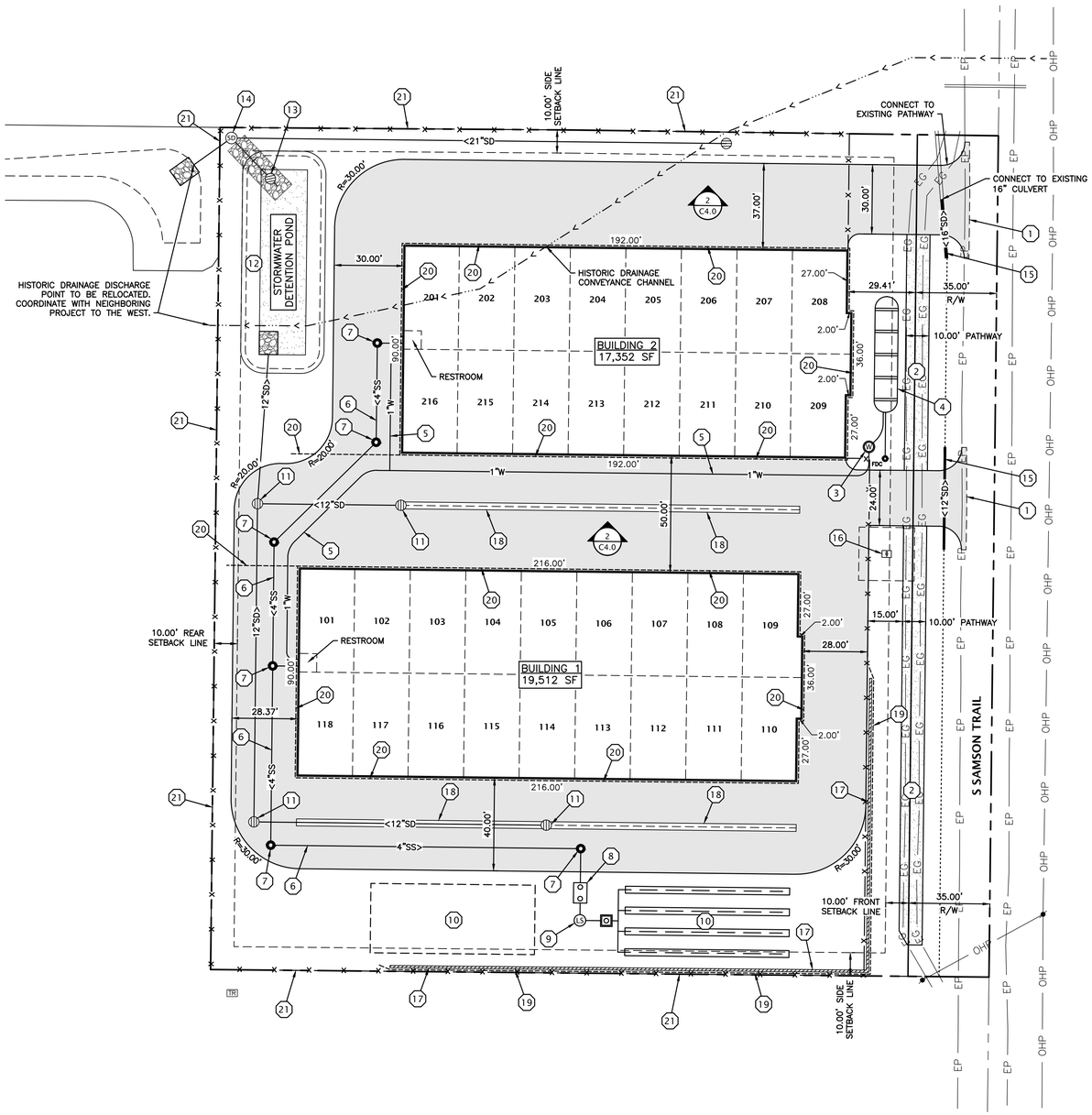

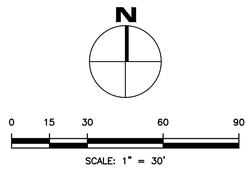

NOTES

1. ALL DIMENSIONS ARE MEASURED FROM EDGE OF BUILDING FOUNDATION.
2. ALL ACCESSIBLE ROUTES TO MEET CURRENT ADA GUIDELINES. ENGINEER OR ARCHITECT MAY CHECK CROSS SLOPES AND RUNNING SLOPES AFTER CONCRETE IS POURED. ANY SLOPES EXCEEDING ALLOWABLE MINIMUMS OR MAXIMUMS SHALL BE REMOVED AND REPLACED AT THE CONTRACTOR'S EXPENSE. CONTRACTOR SHALL VERIFY SLOPES DURING STRINGLINE/FORMING PROCESS. MAXIMUMS SHALL BE AS FOLLOWS:
   - CROSS SLOPE: 1.75% ± 0.25%
   - RUNNING SLOPE: 4.75% ± 0.25%
   - RAMP SLOPE: 1:12 (NO TOLERANCE)
4. REFER TO PLUMBING PLANS FOR CONTINUATION OF UTILITIES INTO BUILDING.
5. REFER TO ARCHITECTURAL AND LANDSCAPE PLANS FOR FENCING AND GATE DETAILS.
6. RETAIN AND PROTECT ALL EXISTING UTILITIES UNLESS OTHERWISE NOTED. CONTRACTOR SHALL VERIFY HORIZONTAL AND VERTICAL LOCATION OF EXISTING UTILITIES PRIOR TO CONSTRUCTION.

CONSTRUCTION KEYNOTES

1. SAWCUT EXISTING ASPHALT A MINIMUM OF 2 FEET TO PROVIDE SMOOTH TRANSITION TO NEW ASPHALT DRIVE AISLE. A COUNTY APPROACH PERMIT IS REQUIRED PRIOR TO INSTALLATION OF NEW DRIVE ACCESS.
2. WIDEN EXISTING CITY OF McCALL PATHWAY TO 10' WIDE. SEE DETAIL 1 SHEET C4.0. NOTIFY CITY OF MCCALL REGARDING ANY PATHWAY CLOSURES.
3. PROPOSED WELL AND FEED LINE TO RESERVE WATER STORAGE TANK.
4. INSTALL 30,000 GALLON RESERVE WATER STORAGE TANK FOR FIRE PROTECTION IN ACCORDANCE WITH NFPA 22. DRY HYDRANT SUCTION HEAD TO BE EQUIPPED WITH 5 INCH STORZ COUPLING AND CAP. SEE DETAIL 2 SHEET C4.1.
5. INSTALL 1" WATER SERVICE LINE. REFER TO PLUMBING PLANS FOR CONTINUATION INTO BUILDING.
6. INSTALL 4" SANITARY SEWER SERVICE AT 1% MINIMUM SLOPE PER ISPWC SD-511. REFER TO PLUMBING PLANS FOR CONTINUATION INTO BUILDING.
7. INSTALL 4" TRAFFIC RATED CLEAN-OUT PER ISPWC SD-506A.
8. INSTALL 1000 GALLON SEPTIC TANK PER CENTRAL HEALTH DEPARTMENT REQUIREMENTS. SEE DETAIL 1 SHEET C4.1.
9. LIFT STATION VAULT AND PUMP. DESIGN BY OTHERS. SEE DETAIL 1 SHEET C4.1.
10. SEPTIC DRAINFIELD AND REPLACEMENT AREA. SEE DETAIL 1 SHEET C4.1.
11. INSTALL 24" DIAMETER CONCRETE DRAIN INLET. SEE DETAIL 5 SHEET C4.0.
12. INSTALL STORM DRAIN DETENTION POND. SEE DETAIL 4 SHEET C4.0.
13. INSTALL 24" DIAMETER OUTLET CONTROL STRUCTURE. SEE DETAIL 4 SHEET C4.0.
14. INSTALL 48" DIAMETER CONCRETE STORM DRAIN MANHOLE WITH 2' SUMP PER ISPWC SD-611.
15. INSTALL STORM DRAIN CULVERT (SIZE PER PLAN) BENEATH DRIVE APPROACH. CULVERT TO HAVE 24" MIN. COVER.
16. PROPOSED ELECTRICAL TRANSFORMER LOCATION. COORDINATE WITH IDAHO POWER AND ELECTRICAL PLANS.
17. CONCRETE RETAINING WALL. REFER TO STRUCTURAL PLANS.
18. INSTALL 3' WIDE CONCRETE VALLEY GUTTER. SEE DETAIL 3 SHEET C4.0.
19. WALL DRAIN. DAYLIGHT AT NORTH AND WEST ENDS OF WALL.
20. INSTALL PERIMETER FOUNDATION DRAIN PER GEOTECHNICAL RECOMMENDATIONS. DAYLIGHT TO WEST. FOUNDATION DRAINS SHALL NOT TIE DIRECTLY INTO THE STORM DRAIN SYSTEM.
21. PROPOSED FENCING. REFER TO ARCHITECTURAL PLANS. FENCE POSTS TO BE PLACED TO AVOID STORM DRAIN PIPING TO ADJACENT PROPERTIES.

© COPYRIGHT 2025 CIVIL SITE WORKS LLC. THIS INSTRUMENT IS THE PROPERTY OF CIVIL SITE WORKS LLC. ANY REPRODUCTION, REUSE, OR MODIFICATION OF THIS INSTRUMENT OR ITS CONTENTS WITHOUT EXPRESS WRITTEN PERMISSION OF CIVIL SITE WORKS LLC IS STRICTLY PROHIBITED.

PROFESSIONAL ENGINEER LICENSED 16970 10-28-25 STATE OF IDAHO CORINNE M. GRAHAM

CSW CIVIL SITE WORKS
PO BOX 6059
BOISE, ID 83707
cgraham@cswengineering.com
(208) 946-3874

REV. NO.	DESCRIPTION	DATE

FILE NAME: 23005-C-SITE PLAN.DWG

DESIGNED:	C. GRAHAM
DRAWN:	C. GRAHAM
CHECKED:	C. GRAHAM
APPROVED:	C. GRAHAM

PREPARED FOR:
CAM ECHANIS

ALPINE STORAGE
450 S SAMSON TRAIL, McCALL, IDAHO

PROPOSED SITE PLAN

CSW PROJECT NO.	23005
DRAWING DATE	10/28/2025

C2.0

© COPYRIGHT 2025 CIVIL SITE WORKS LLC. THIS INSTRUMENT IS THE PROPERTY OF CIVIL SITE WORKS LLC. ANY REPRODUCTION, REUSE, OR MODIFICATION OF THIS INSTRUMENT OR ITS CONTENTS WITHOUT EXPRESS WRITTEN PERMISSION OF CIVIL SITE WORKS LLC IS STRICTLY PROHIBITED.

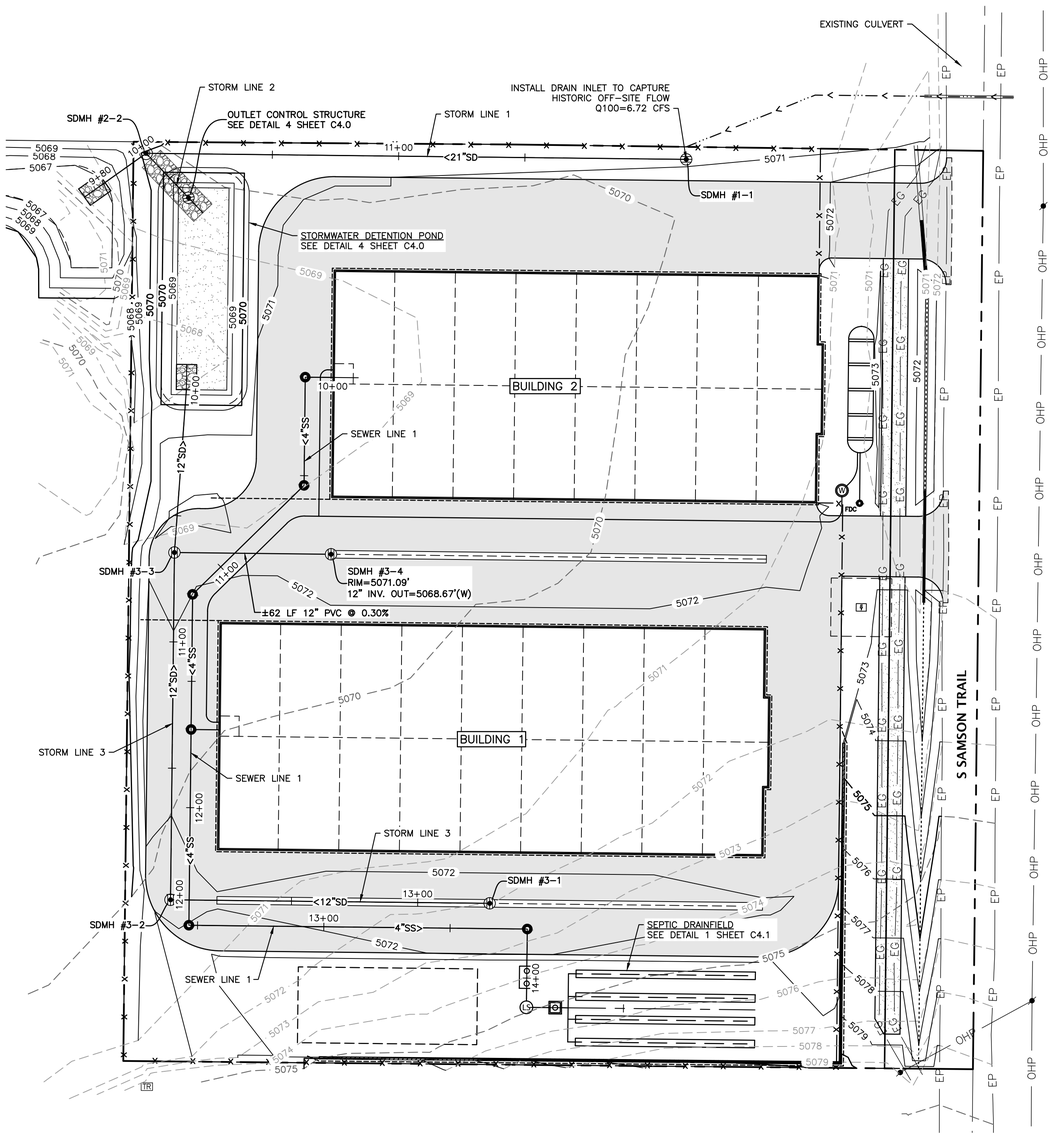

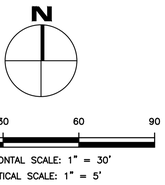

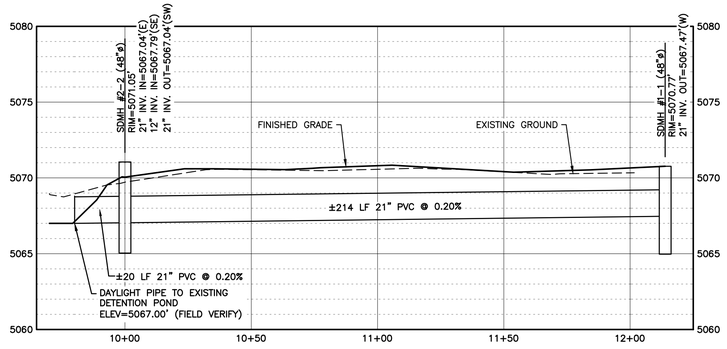

STORM LINE 1 PROFILE

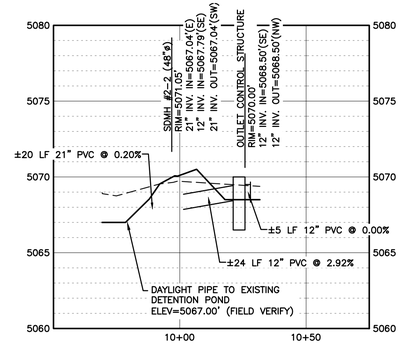

STORM LINE 2 PROFILE

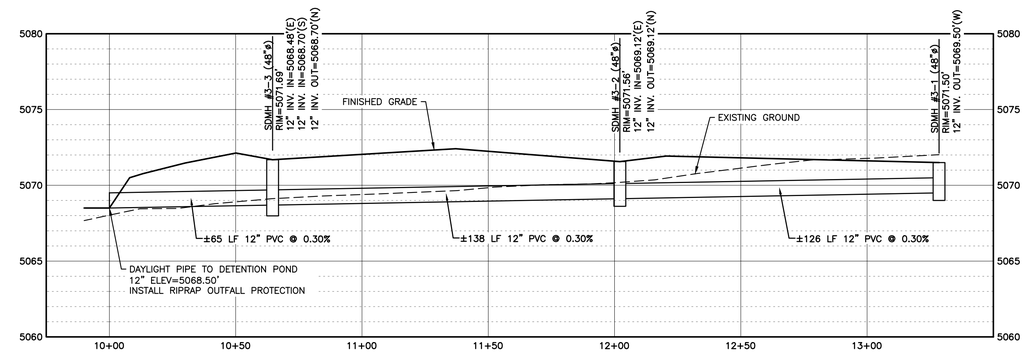

STORM LINE 3 PROFILE

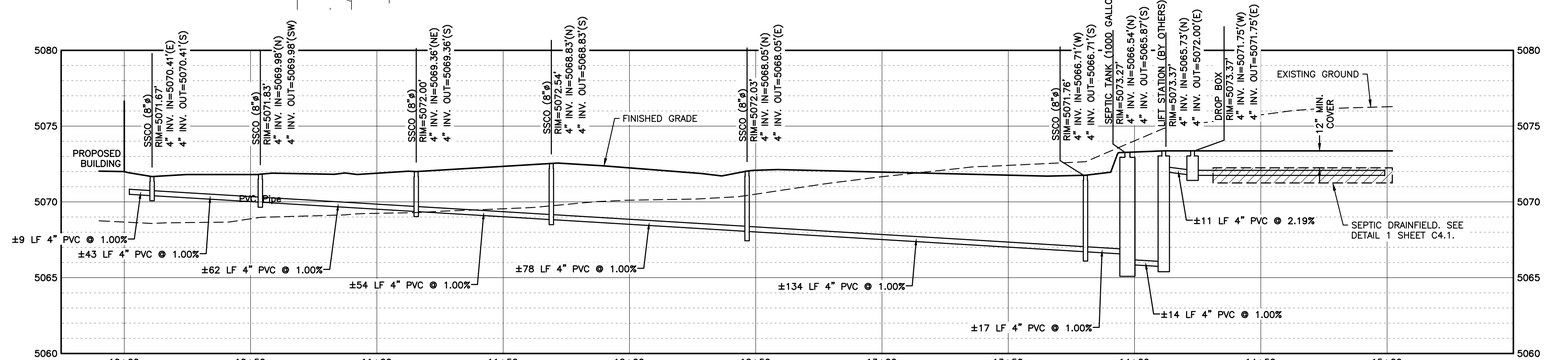

SEWER LINE 1 PROFILE

PROFESSIONAL ENGINEER
LICENSED
16970
10-28-25
STATE OF IDAHO
CORINNE M. GRAHAM

CSW CIVIL SITE WORKS
PO BOX 6059
BOISE, ID 83707
cgraham@cswengineering.com
(208) 946-3874

REV. NO.	DESCRIPTION	DATE

FILE NAME: 23005-C-UTILITY PLAN.DWG

DESIGNED:	C. GRAHAM
DRAWN:	C. GRAHAM
CHECKED:	C. GRAHAM
APPROVED:	C. GRAHAM

PREPARED FOR:
CAM ECHANIS

ALPINE STORAGE

450 S SAMSON TRAIL, McCALL, IDAHO

PROPOSED UTILITY IMPROVEMENTS

CSW PROJECT NO.	23005
DRAWING DATE	10/28/2025

C2.1

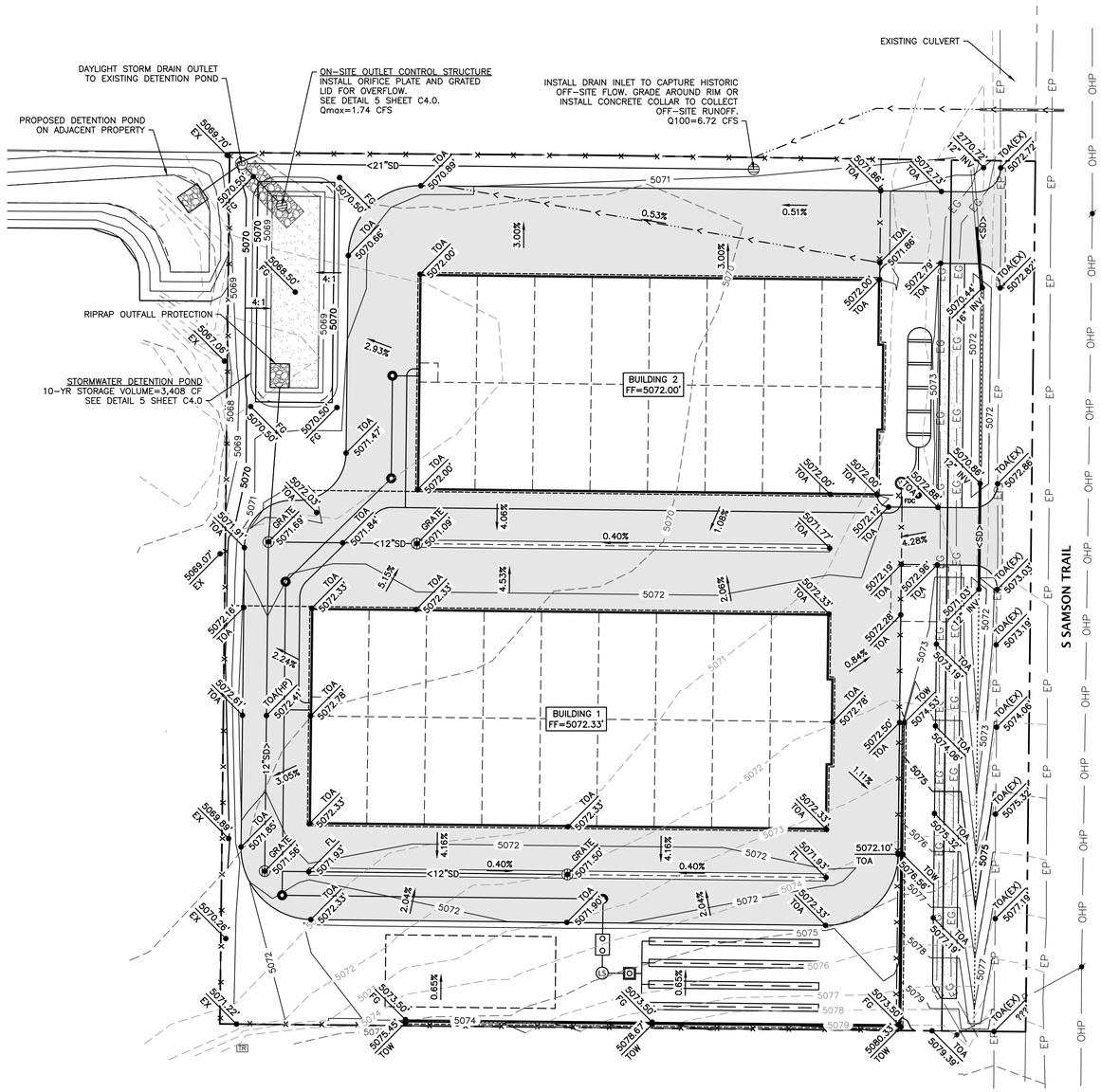



LEGEND

- PROPOSED MAJOR CONTOUR (5')
- PROPOSED MINOR CONTOUR (1')
- EXISTING MAJOR CONTOUR (5')
- EXISTING MINOR CONTOUR (1')
- DRAINAGE ARROW WITH PERCENT SLOPE

ABBREVIATIONS

CL	CENTERLINE
EX	EXISTING GROUND
FF	FINISHED FLOOR ELEVATION
FG	FINISHED GRADE
FL	FLOW LINE
GRATE	INLET ELEVATION
HP	HIGH POINT
INV	INVERT
ME	MATCH EXISTING
RIM	RIM ELEVATION
TVC	TOP BACK OF VERTICAL CURB
TOA	TOP OF ASPHALT
TOC	TOP OF CONCRETE
TOW	TOP OF WALL

GRADING NOTES

1. SLOPE FINISHED GRADE AWAY FROM BUILDINGS PER INTERNATIONAL BUILDING CODE.
2. ALL VALVE COVERS, MANHOLE RIMS, AND LIDS SHALL BE SET FLUSH WITH FINISHED ASPHALT GRADES.
3. NO GRADING IS PERMITTED ON ADJACENT PROPERTY. MATCH INTO EXISTING GRADE 2' FROM PROPERTY BOUNDARY. NO DRAINAGE SHALL BE ALLOWED TO PASS FROM THE PROJECT SITE ONTO ADJACENT PROPERTY.
4. NO SIDEWALKS SHALL EXCEED 2.0% CROSS SLOPE AND 5.0% RUNNING SLOPE (NO TOLERANCES ALLOWED).
5. ANY UNCONTROLLED FILL ENCOUNTERED BENEATH PROPOSED BUILDING PADS AND DRIVE AISLES SHALL BE EXCAVATED TO SUFFICIENT DEPTHS TO EXPOSE COMPETENT NATIVE SOILS, REPLACED, AND RECOMPACTED.
8. PRIOR TO PLACEMENT OF ANY GENERAL FILL, THE SITE SUBGRADE SHALL BE PREPPED IN ACCORDANCE WITH THE GEOTECHNICAL REPORT. THE PREPPED SUBGRADE SHALL BE OBSERVED AND APPROVED BY THE PROJECT GEOTECHNICAL ENGINEER PRIOR TO PLACEMENT OF FILL MATERIALS.
9. FILL PLACED TO DEVELOP BUILDING PADS SHALL MEET THE REQUIREMENTS FOR GENERAL FILL. GENERAL FILL USED FOR SITE GRADING MAY BE OBTAINED FROM ON-SITE EXCAVATIONS OR APPROVED BORROW SOURCES. GENERAL FILL MATERIAL SHALL HAVE A MAXIMUM PARTICLE SIZE LESS THAN 6 INCHES AND SHALL BE FREE OF EXCESS MOISTURE, ORGANIC MATTER AND DEBRIS. REFER TO THE GEOTECHNICAL REPORT FOR ADDITIONAL REQUIREMENTS.

© COPYRIGHT 2025 CIVIL SITE WORKS LLC. THIS INSTRUMENT IS THE PROPERTY OF CIVIL SITE WORKS LLC. ANY REPRODUCTION, REUSE, OR MODIFICATION OF THIS INSTRUMENT OR ITS CONTENTS WITHOUT EXPRESS WRITTEN PERMISSION OF CIVIL SITE WORKS LLC IS STRICTLY PROHIBITED.

PROFESSIONAL ENGINEER
LICENSED
16970
10-28-25
STATE OF IDAHO
CORINNE M. GRAHAM

CSW CIVIL SITE WORKS
PO BOX 6059
BOISE, ID 83707
cgraham@cswengineering.com
(208) 946-3874

REV. NO.	DESCRIPTION	DATE

FILE NAME: 23005-C-GRADING PLAN.DWG

DESIGNED:	C. GRAHAM
DRAWN:	C. GRAHAM
CHECKED:	C. GRAHAM
APPROVED:	C. GRAHAM

PREPARED FOR:
CAM ECHANIS

ALPINE STORAGE

450 S SAMSON TRAIL, McCALL, IDAHO

GRADING/DRAINAGE/STORMWATER PLAN

CSW PROJECT NO.	23005
DRAWING DATE	10/28/2025

C3.0

© COPYRIGHT 2025 CIVIL SITE WORKS LLC. THIS INSTRUMENT IS THE PROPERTY OF CIVIL SITE WORKS LLC. ANY REPRODUCTION, REUSE, OR MODIFICATION OF THIS INSTRUMENT OR ITS CONTENTS WITHOUT EXPRESS WRITTEN PERMISSION OF CIVIL SITE WORKS LLC IS STRICTLY PROHIBITED.

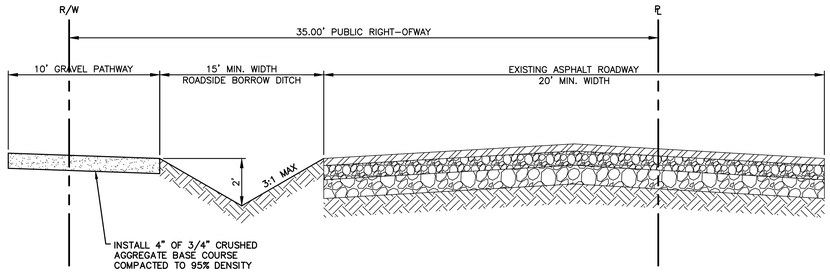

S. SAMSON TRAIL TYPICAL STREET SECTION 1 / C4.0
SCALE: NOT TO SCALE

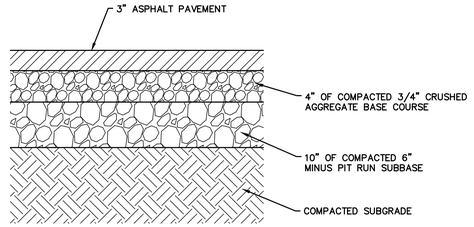

TYPICAL ASPHALT SECTION - SITE 2 / C4.0
SCALE: NOT TO SCALE

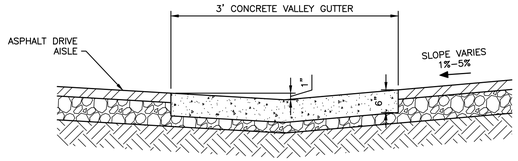

3' CONCRETE VALLEY GUTTER 3 / C4.0
SCALE: NOT TO SCALE

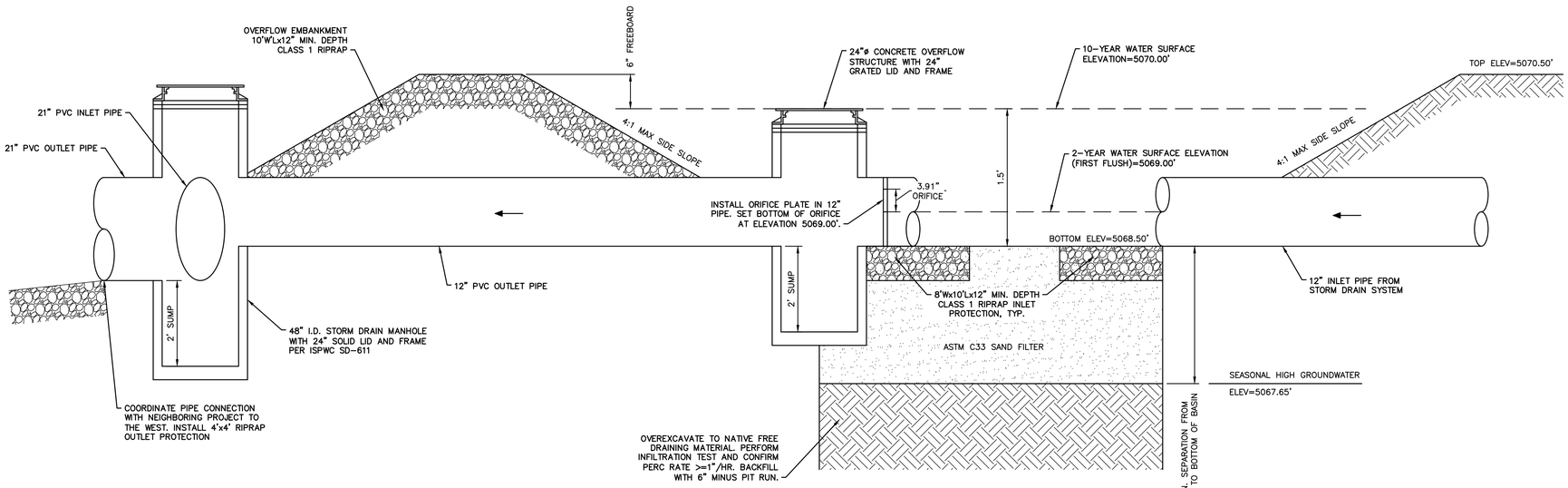

STORMWATER DETENTION POND DETAIL 4 / C4.0
SCALE: NOT TO SCALE

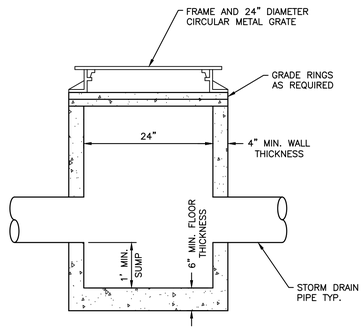

24" DIAMETER CONCRETE DRAIN INLET 5 / C4.0
SCALE: NOT TO SCALE

PROFESSIONAL ENGINEER
LICENSED
16970
10-28-25
STATE OF IDAHO
CORINNE M. GRAHAM

CSW CIVIL SITE WORKS
PO BOX 6059
BOISE, ID 83707
cgraham@cswengineering.com
(208) 946-3874

REV. NO.	DESCRIPTION	DATE

FILE NAME: 23005-C-GRADING PLAN.DWG

DESIGNED:	C. GRAHAM
DRAWN:	C. GRAHAM
CHECKED:	C. GRAHAM
APPROVED:	C. GRAHAM

PREPARED FOR:
CAM ECHANIS

ALPINE STORAGE
450 S SAMSON TRAIL, McCALL, IDAHO
ENGINEERING DETAILS

CSW PROJECT NO.	23005
DRAWING DATE	10/28/2025

C4.0

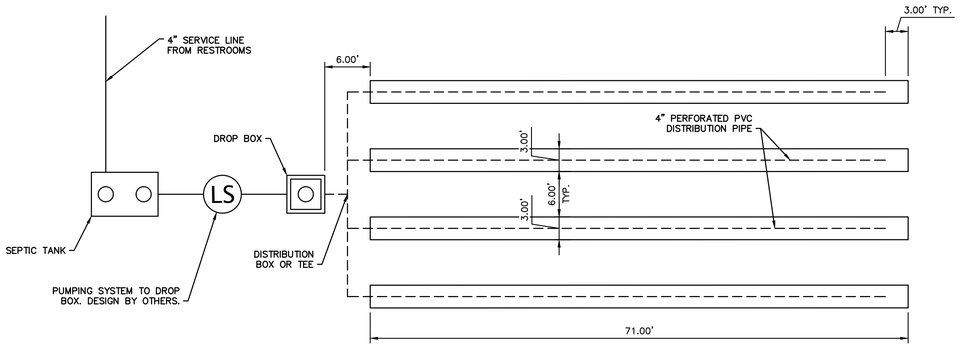

PLAN VIEW

NOTES

ALL SEPTIC SYSTEM COMPONENTS AND APPURTENANCES SHALL MEET THE REQUIREMENTS OF THE IDAHO DEQ TECHNICAL GUIDANCE MANUAL FOR INDIVIDUAL AND SUBSURFACE SEWAGE DISPOSAL SYSTEMS.

SOIL TYPE: C-2
DAILY VOLUME: 170 GALLONS/DAY

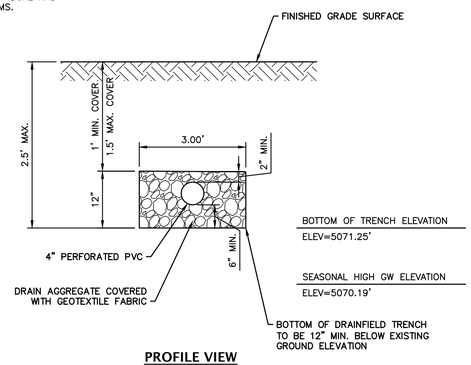

PROFILE VIEW

SEPTIC DRAINFIELD DETAIL 1 / C4.1
SCALE: NOT TO SCALE

Standard Dry Hydrant - Suction (Draft)

Appurtenances

A. 30" Diameter manway with bolted cover.
B. Lockable 4" water level inspection hatch on manway cover.
C. Combination vent and red/green water level indicator.
D. Dry hydrant suction head with aluminum cap and removable strainer.
E. 6" draw pipe with N.F.P.A. anti-vortex plate at foot.
F. High level weep overflow to allow any excess water to drain off.
G. Siamese clappered refill with 2 1/2" NST-F swivels.
H. Anchor straps, cable, and concrete deadmen poured on site.
J. Pipe bollards in concrete.

Notes

1. Lift for 8' diameter tank = 13 vertical feet to hydrant head.
2. Add or delete accessories to meet your specific water supply requirements.
3. Geotextile fabric recommended between gravel backfill and soil cover.
4. Height of hydrant (D) should be below pump inlet to avoid trapping air in suction hose.
5. Place stabilizing rocks around PVC riser pipes and hydrant.
6. Use optional Darco a deadman anchor system when necessary. Not all tanks require anchoring.
7. Paint all exposed PVC pipe for UV protection.
8. Locate cistern perpendicular to the road when possible.

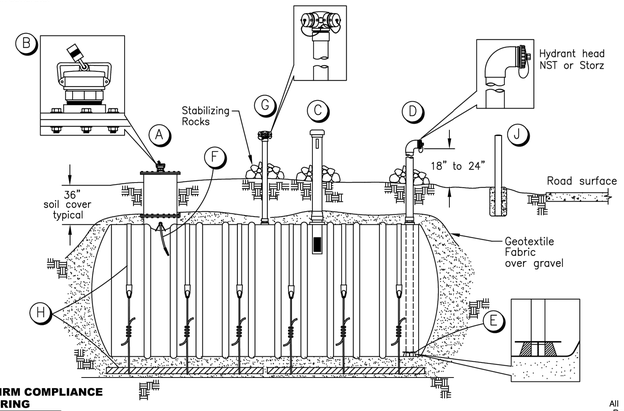

PLEASE CONFIRM COMPLIANCE BEFORE ORDERING
NOT TO SCALE, FOR ILLUSTRATION ONLY

Darco Inc.
All Rights Reserved
Revison 3/14/22

WATER STORAGE/FIRE SUPPRESSION DETAIL 2 / C4.1
SCALE: NOT TO SCALE

© COPYRIGHT 2025 CIVIL SITE WORKS LLC. THIS INSTRUMENT IS THE PROPERTY OF CIVIL SITE WORKS LLC. ANY REPRODUCTION, REUSE, OR MODIFICATION OF THIS INSTRUMENT OR ITS CONTENTS WITHOUT EXPRESS WRITTEN PERMISSION OF CIVIL SITE WORKS LLC IS STRICTLY PROHIBITED.

PROFESSIONAL ENGINEER
LICENSED
16970
10-28-25
STATE OF IDAHO
CORINNE M. GRAHAM

CIVIL SITE WORKS
PO BOX 6059
BOISE, ID 83707
cgraham@cswengineering.com
(208) 946-3874

REV. NO.	DESCRIPTION	DATE

FILE NAME: 23005-C-GRADING PLAN.DWG

DESIGNED:	C. GRAHAM
DRAWN:	C. GRAHAM
CHECKED:	C. GRAHAM
APPROVED:	C. GRAHAM

PREPARED FOR:
CAM ECHANIS

ALPINE STORAGE
450 S SAMSON TRAIL, McCALL, IDAHO
ENGINEERING DETAILS (CONT.)

CSW PROJECT NO.	23005
DRAWING DATE	10/28/2025

C4.1

© COPYRIGHT 2025 CIVIL SITE WORKS LLC. THIS INSTRUMENT IS THE PROPERTY OF CIVIL SITE WORKS LLC. ANY REPRODUCTION, REUSE, OR MODIFICATION OF THIS INSTRUMENT OR ITS CONTENTS WITHOUT EXPRESS WRITTEN PERMISSION OF CIVIL SITE WORKS LLC IS STRICTLY PROHIBITED.

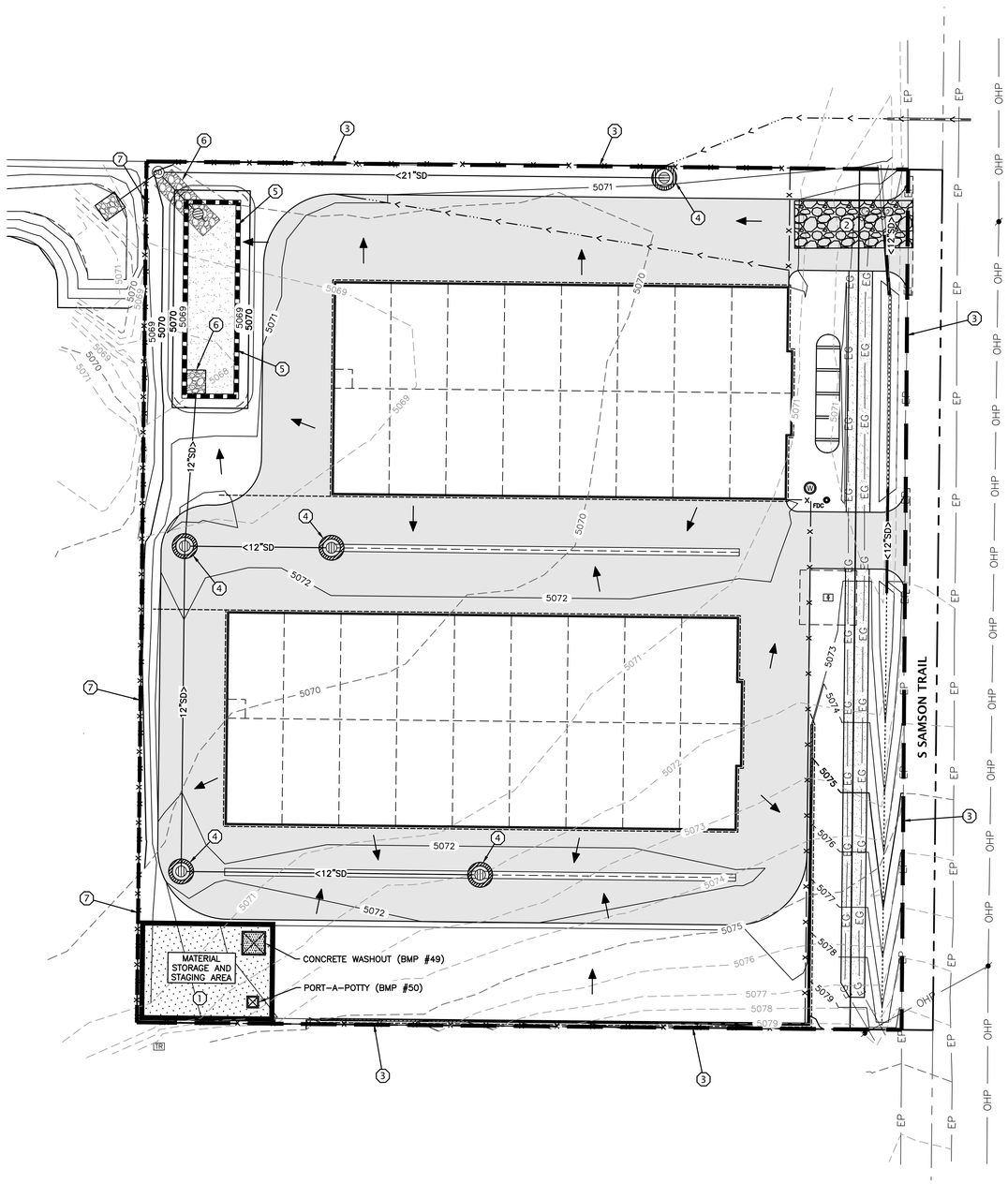

N

0 15 30 60 90

SCALE: 1" = 30'

811 Know what's below. Call before you dig.

CALL BEFORE YOU DIG

CALL DIGLINE INC.
PRIOR TO COMMENCING
UNDERGROUND WORK
(208) 342-1585

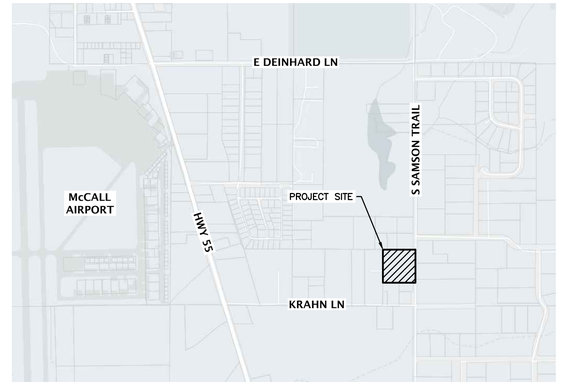

VICINITY MAP
NOT TO SCALE

LEGEND

- PROPOSED MAJOR CONTOUR (5')
- PROPOSED MINOR CONTOUR (1')
- EXISTING MAJOR CONTOUR (5')
- EXISTING MINOR CONTOUR (1')
- DRAINAGE ARROW WITH PERCENT SLOPE

DISTURBANCE AREA = ±2.52 ACRES

KEYNOTES

1. STAGING AREA (BMP #37) WITH CONCRETE WASTE MANAGEMENT (BMP #49), AND PORT-A-POTTY (BMP #50). INSTALL PRIOR TO CONSTRUCTION ACTIVITIES.
2. VEHICLE SEDIMENT CONTROL (BMP #40) INSTALL PRIOR TO CONSTRUCTION ACTIVITIES.
3. LIMITS OF CONSTRUCTION. INSTALL PERIMETER/SECURITY FENCING.
4. INLET PROTECTION (BMP #74) INSTALL PRIOR TO CONSTRUCTION (EXISTING INLETS) OR AFTER CONSTRUCTION OF NEW DRAIN INLET.
5. INSTALL FIBER ROLLS (BMP #64) AROUND PERIMETER OF DETENTION POND UNTIL FINAL STABILIZATION IS ACHIEVED.
6. INSTALL RIPRAP OUTLET PROTECTION (BMP #56) AT PIPE OUTFALL AFTER PIPE INSTALLATION.
7. INSTALL SILT FENCE (BMP #65) TO PREVENT SEDIMENT RUNOFF TO ADJACENT PROPERTY.

EROSION CONTROL NOTES

1. DUST CONTROL, STOCKPILE MANAGEMENT, SPILL PREVENTION, AND WASTE MANAGEMENT SHALL FOLLOW THE RECOMMENDATIONS OF THE IDEQ STORMWATER BMP CATALOG.
2. BMP NUMBERS CORRESPOND TO THE IDAHO CATALOG OF STORMWATER BEST MANAGEMENT PRACTICES, APRIL 2020 EDITION.
3. LAND DISTURBING ACTIVITIES SHALL NOT COMMENCE UNTIL APPROVAL TO DO SO HAS BEEN RECEIVED BY GOVERNING AUTHORITIES.
4. THE GENERAL CONTRACTOR SHALL STRICTLY ADHERE TO THE SWPPP DURING CONSTRUCTION OPERATIONS.
5. NO LAND CLEARING OR GRADING SHALL BEGIN UNTIL ALL EROSION CONTROL MEASURES HAVE BEEN INSTALLED.
6. ALL EXPOSED AREAS SHALL BE SEEDED OR MULCHED AS SPECIFIED IN THE LANDSCAPE PLAN WITHIN 14 DAYS OF FINAL GRADING.
7. SHOULD CONSTRUCTION STOP FOR LONGER THAN 14 DAYS, THE SITE SHALL BE TEMPORARILY STABILIZED BY SEEDING, MULCHING, OR STRAW COVER.
8. INSPECT EROSION CONTROL MEASURES AFTER EACH RAIN AND AT LEAST ONCE A WEEK.
9. THIS PLAN SHALL NOT BE CONSIDERED ALL INCLUSIVE AS THE GENERAL CONTRACTOR SHALL TAKE ALL NECESSARY PRECAUTIONS TO PREVENT SOIL SEDIMENT FROM LEAVING THE SITE.
10. GENERAL CONTRACTOR SHALL COMPLY WITH ALL STATE AND LOCAL ORDINANCES THAT APPLY.
11. ADDITIONAL EROSION AND SEDIMENT CONTROL MEASURES WILL BE INSTALLED IF DEEMED NECESSARY BY ON SITE INSPECTION.
12. OPERATOR SHALL BE RESPONSIBLE TO TAKE WHATEVER MEANS NECESSARY TO ESTABLISH PERMANENT SOIL STABILIZATION.
13. SEDIMENT SHALL BE REMOVED FROM EROSION CONTROL MEASURES BEFORE THEY ARE 25% FULL.
14. PORTABLE RESTROOM SPILL CONTAINMENT: PLACE SAND BAGS AT 7' AROUND FACILITY AND 1' IN HEIGHT TO CONTAIN POSSIBLE SPILLAGE.
15. LIMITS OF CONSTRUCTION SHALL BE PROPERTY BOUNDARY AS SHOWN.
16. CONTRACTOR SHALL COMPLY WITH THE ENVIRONMENTAL PROTECTION AGENCY (EPA) NATIONAL POLLUTANT DISCHARGE ELIMINATION SYSTEM (NPDES).

PROFESSIONAL ENGINEER
LICENSED
16970
10-28-25
STATE OF IDAHO
CORINNE M. GRAHAM

CIVIL SITE WORKS
PO BOX 6059
BOISE, ID 83707
cgraham@cswengineering.com
(208) 946-3874

REV. NO.	DESCRIPTION	DATE

FILE NAME: 23005-C-ESC PLAN.DWG

DESIGNED:	C. GRAHAM
DRAWN:	C. GRAHAM
CHECKED:	C. GRAHAM
APPROVED:	C. GRAHAM

PREPARED FOR:
CAM ECHANIS

ALPINE STORAGE

450 S SAMSON TRAIL, McCALL, IDAHO

EROSION AND SEDIMENT CONTROL PLAN

CSW PROJECT NO.	23005
DRAWING DATE	10/28/2025

ESC1.0

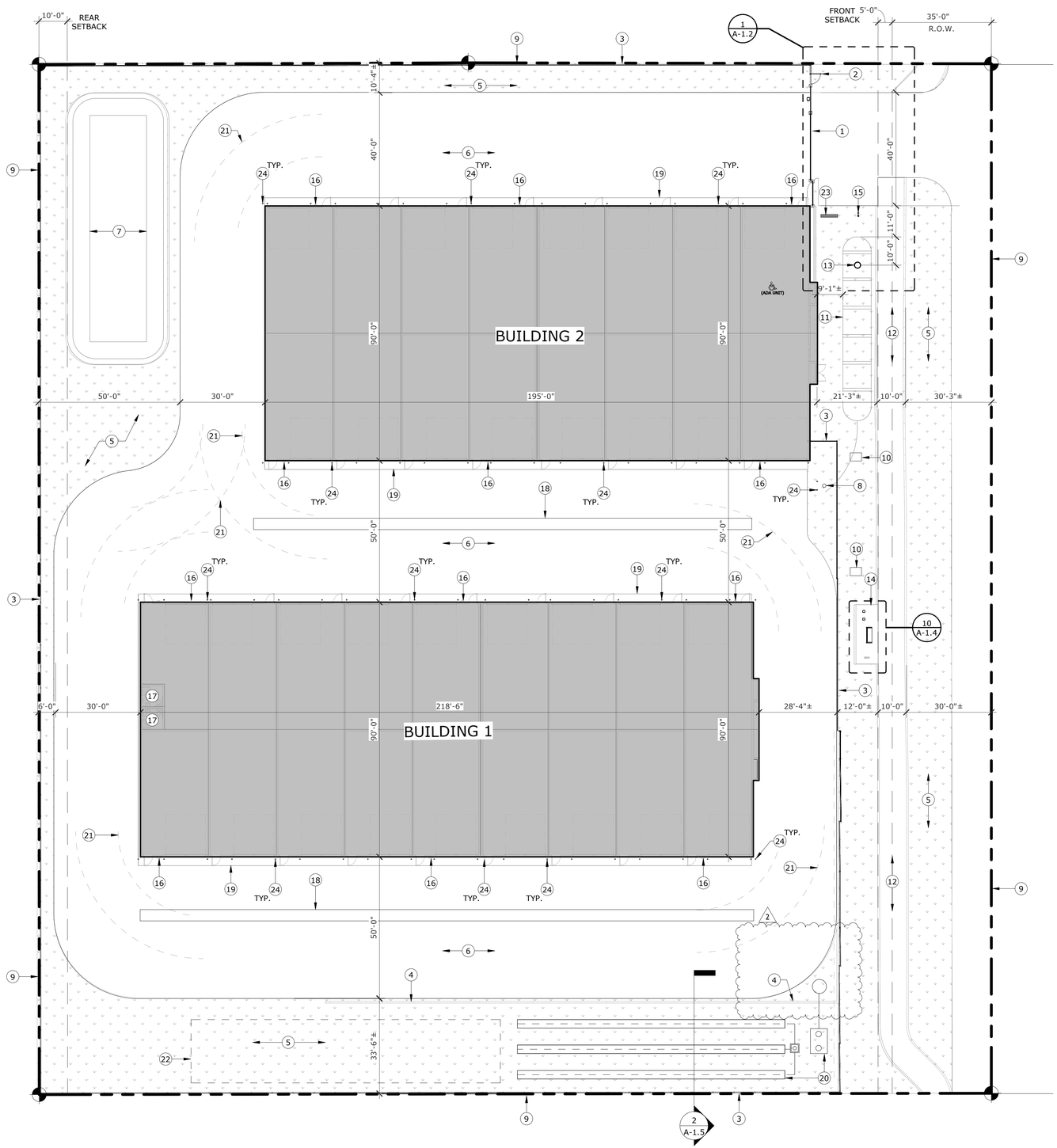

SITE PLAN
SCALE: 1" = 20'-0"

N

GENERAL NOTES

A.	RE: CIVIL GRADING PLAN FOR FINISH SITE ELEVATIONS.
B.	RE: CIVIL DRAWINGS FOR NEW STORMWATER & UTILITY LOCATIONS.
C.	RE: CIVIL DRAWINGS FOR NEW AND EXISTING FIRE HYDRANTS.
D.	FOR PIPE BOLLARD LOCATIONS, SEE FLOOR PLANS.
E.	SIGNAGE WILL BE SUBMITTED UNDER SEPARATE PERMIT.

SITE RECAP

ZONING:
CC

TOTAL PROJECT SITE:

RP18N03E169755	2.812 acres	122,479 SF

PROPOSED BUILDING FOOTPRINT:

BLDG	CONST.	OCC.	UNITS	SQ. FT.
BUILDING 1	IIB	S1	18	19,557 SF
BUILDING 2	IIB	S1	16	17,397 SF
TOTAL			34	36,954 SF

LOT COVERAGE:

BUILDING		
PROPOSED	37,954 SF	30.7%
IMPERVIOUS SURFACE		
PROPOSED	41,294 SF	33.4%
LANDSCAPE AREA		
PROPOSED	31,613 SF	25.6%
RIGHT OF WAY		
PROPOSED	12,729 SF	10.3%
TOTAL NET LOT AREA	123,590 SF	100.0%

SETBACKS:
FRONT - 5'-0"
REAR - 10'-0"
SIDE - 0'-0"

PARKING:
REQUIRED: MAINT./R.R.- 0 SPACE PER 0 SF
0 SF / 0 SF = 0 SPACES
UNIT - 0 SPACE PER 0 UNITS
0 UNITS / 0 UNITS = 0 SPACES
HC ACCESSIBLE - 0 SPACE
BICYCLE PARKING - 0 SPACES

PROVIDED:		
	HC ACCESSIBLE	0 OF 0 SPACES
	STANDARD	0 OF 0 SPACES
	TOTAL	0 OF 0 SPACES
	BICYCLE	0 OF 0 SPACES

BUILDING HEIGHT:
ALLOWED: 0'-0" MAXIMUM
PROVIDED: 0'-0" MAXIMUM

KEYNOTES

1	24'-0" SLIDING ENTRY GATE. REF. DETAIL 1/A-1.3.
2	FIRE DEPARTMENT AND EGRESS ACCESS MAN GATE. REF. SHEET A-1.3 FOR DETAILS.
3	PROPOSED FENCE. REF. SHEET A-1.2 FOR DETAILS.
4	RETAINING WALL. REF. CIVIL & STRUCTURAL DRAWINGS.
5	LANDSCAPING AREA. REF. L-1.0 FOR GROUND COVER DETAILS.
6	PAVING. PER CIVIL DRAWINGS.
7	PROPOSED DETENTION POND. REF. CIVIL DRAWINGS.
8	PROPOSED WELL LOCATION.
9	PROPERTY LINE.
10	PROPOSED TRANSFORMER LOCATION. REF. ELECTRICAL DRAWINGS.
11	PROPOSED 36,000 GALLON CISTERN. REF. CIVIL DRAWINGS.
12	EXISTING RECYCLED ASPHALT PATHWAY.
13	PROPOSED FIRE DEPARTMENT CONNECTION.
14	PROPOSED PUBLIC AMENITIES. SEE DETAIL 1/A-1.2.
15	ACCESS KEYPAD. SEE DETAIL 2/A-1.3.
16	WALL MOUNTED FIRE EXTINGUISHER. SEE 3/A-7.0 FOR MOUNTING HEIGHT.
17	PROPOSED RESTROOM.
18	3'-0" CONCRETE VALLEY GUTTER. REF. CIVIL DRAWINGS.
19	3'-0" CONCRETE APRON. SEE DETAIL 6/A-1.3.
20	PROPOSED SEPTIC LOCATION. REF. CIVIL.
21	FIRE ENGINE TURN RADIUS, 30' INTERIOR RADIUS & 45' EXTERIOR RADIUS.
22	DASHED LINE INDICATES REPLACEMENT FIELD - ABOVE GROUND. RE. CIVIL.
23	MONUMENT SIGN. INSTALL PER MANUF. RECOMMENDATIONS.
24	STEEL PIPE BOLLARD. SEE DETAIL 3/A-1.3.

HATCH DESIGN ARCHITECTURE
200 W. 36TH ST.
BOISE, IDAHO 83714
OFFICE: (208) 475-3204

COPYRIGHT 2026
HATCH DESIGN ARCHITECTURE

THIS PLAN AND/OR DESIGN ARE NOT TO BE CHANGED OR COPIED IN ANY FORM OR MANNER WHATSOEVER NOR ARE THEY TO BE ASSIGNED TO A THIRD PARTY WITHOUT WRITTEN CONSENT FROM HATCH DESIGN ARCHITECTURE AND WITH ADDITIONAL COMPENSATION TO THE ARCHITECT.

THE USE OF THE PLANS SHALL BE RESTRICTED TO THE ORIGINAL SITE FOR WHICH THEY WERE PREPARED AND PUBLICATION OF THE DRAWINGS, SPECIFICATIONS, AND OTHER DOCUMENTS PREPARED BY THE DESIGNER AND THE DESIGNER'S CONSULTANTS IS RESTRICTED TO THE OWNER AND CONSTRUCTION OF THE PROJECT. THE DESIGNER AND THE DESIGNER'S CONSULTANTS SHALL BE DEEMED THE AUTHORS AND OWNERS OF THEIR RESPECTIVE INSTRUMENTS OF SERVICE AND SHALL RETAIN ALL COMMON LAW, STATUTORY AND OTHER RESERVED RIGHTS, INCLUDING COPYRIGHTS.

NEW CONSTRUCTION FOR:
ALPINE STORAGE
450 S. SAMSON TRAIL | MCCALL, ID

DES'N	DATE	DESCRIPTION - COMMENTS
1	07/14/2026	BID ADDENDUM 1
2	08/18/2026	LIFT STATION

DATE: SEPT 2026
DRAWN BY: NL
CHECKED BY: JLH
JOB NUMBER: 23116

SHEET TITLE
SITE PLAN

SHEET NUMBER
A-1.0

A parcel of land situate in the SE¼ of the SE¼, Section 16, Township 18 North, Range 3 East Boise Meridian, Valley County, Idaho more particularly described as follows:

Commencing at a ½" rebar marking the Section Corner common to Sections 15, 16, 21, and 22, Township 18 North, Range 3 East Boise Meridian, Valley County, Idaho; Thence North 00°38'47" East 247.58 feet along the line common to said Sections 15 and 16, to a PK nail, the Real Point of Beginning:

Thence North 89°25'00" West 25.00 feet to a ½" rebar on the westerly right-of-way of Samson Trail,

Thence continuing North 89°25'00" West 133.11 feet to a ½" rebar, as shown on that particular Record of Survey recorded as Instrument No. 247053 in Book 6 on Page 708 of Surveys in the Office of the Recorder of Valley County, Idaho,

Thence continuing North 89°25'00" West 178.35 feet to a ½" rebar, Thence North 00°38'47" East 363.96 feet to a ½" rebar on the southerly boundary of that particular parcel described in Warranty Deed, Instrument No. 85332, and as shown on that particular Record of Survey recorded as Instrument No. 174710, in Book 3 on Page 115 in the Office of the Recorder of Valley County, Idaho,

Thence South 89°33'47" East 151.69 feet to a 5/8" rebar,

Thence South 89°13'39" East 159.78 feet to a 5/8" rebar on the westerly right-of-way of Samson Trail,

Thence continuing South 89°13'39" East 25.00 feet to a PK nail on the line common to said Sections 15 and 16,

Thence South 00°38'47" West 363.73 feet along said common line to the Point of Beginning.

From: Steve Thiessen <steve@hatchda.com>
Sent: Monday, November 9, 2026 11:14 AM
To: Lori Hunter <lhunter@valleycountyid.gov>
Cc: Jeffery Hatch <jeff@hatchda.com>
Subject: Re: SUB 26-014 Alpine Storage Condominiums

Good morning Lori,

I have attached the 11/03 neighborhood meeting information. This meeting was held virtually and no neighbors logged in. Please review the attached WUI and let me know if you have any questions or comments

Thank you,
Steve

Steve Thiessen, AIT
Entitlement Director

Hatch Design Architecture
200 w. 36th Street, Boise, ID 83714
C: 208-598-5032
O: 208-475-3204 ex 5
D: 208-370-5992
E: steve@hatchda.com

This communication may contain information that is privileged, confidential, legally privileged, and/or exempt from disclosure under applicable law. If you are not the intended recipient, you are hereby notified that any disclosure, copying, distribution, or use of the information contained herein (including any reliance thereon) is strictly prohibited. If this communication was received in error, please immediately contact the sender and destroy the material in its entirety, whether in electronic or hard copy format. ©2026

HATCH DESIGN
ARCHITECTURE

200 w 36th Street Boise, ID 83714 • Phone 208.475.3204 • Email: info@hatchda.com

October 5, 2026

Dear Property Owner,

Prior to submittal of a condominium plat application, Valley County requires an opportunity for a meeting between the applicant and neighbors. This is your notice to meet and review the proposed condominium plat for Alpine Storage facility. This is not a public hearing, and public officials will not be present. If you have questions regarding meeting requirements, please contact the Planning and Zoning Services at (208) 382-7116.

If you have questions about the development project, please contact the representative listed below.

Purpose: To review and provide comments regarding the planned unit development of the property at 450 S Samson Trail, McCall, ID.

When: The meeting will be held Saturday, October 19th, 2026 from 10-11am.

Where: The meeting will be held virtually via Microsoft Teams. To get access please see the link & code below.

https://teams.microsoft.com/meet/289365351242566?p=q5C7zTRSUBILiQQueN
Meeting ID: 289 365 351 242 566
Passcode: 95Ao6h9D

Project Description: The proposed project is to allow for Alpine Storage to sell units individually. Attached is an exhibit of the proposed condo plat plan.

If you have questions about the meeting or proposed development project, please contact:

Jeffery L. Hatch with Hatch Design Architecture LLC- Applicant's Representative
200 W 36th Street, Boise, ID 83714
(208) 475-3204

Thank you for your time and we look forward to meeting you!
Sincerely,



PRELIMINARY PLAT
OF
ALPINE STORAGE CONDOMINIUMS

LOCATED WITHIN THE SE 1/4 OF THE SE 1/4 OF
SECTION 16, TOWNSHIP 18 NORTH, RANGE 3 EAST,
BOISE MERIDIAN, VALLEY COUNTY, IDAHO
2026

0 30 60 Feet

LEGEND
EXISTING CONDITIONS

- EDGE OF PAVEMENT
- FENCE LINE
- EXISTING OVERHEAD WIRES
- EXISTING FLOWLINE
- EXISTING STORM DRAIN PIPE
- EXISTING STORM DRAINAGE TOP BANK
- EXISTING TREE, TRUNK DIAMETER IN INCHES
- EXISTING UTILITY POLE
- EXISTING ELECTRIC POINT OF ENTRY
- EXISTING POWER METER
- EXISTING GAS METER
- EXISTING PIZOMETER
- EXISTING ASPHALT

LEGEND
BOUNDARY AND PROPOSED IMPROVEMENTS

- SURVEYED PARCEL BOUNDARY
- ADJACENT RECORD BOUNDARY
- PRESCRIPTIVE RIGHT-OF-WAY BOUNDARY
- PLATTED RIGHT-OF-WAY BOUNDARY
- SECTIONAL LINE
- PROPOSED BUILDING SETBACK
- PROPOSED EASEMENT BOUNDARY
- EDGE OF PAVEMENT
- FENCE LINE
- FOUND 1/2" REBAR, AS NOTED
- FOUND 5/8" REBAR, AS NOTED
- FOUND ALUMINUM CAP
- FOUND IRON PIPE
- FOUND MAG/PK NAIL
- CATCH/GRATED MANHOLE
- SEWER MANHOLE
- SEWER CLEANOUT
- WATER WELL
- FIRE DEPARTMENT CONNECTION
- TRANSFORMER
- ASPHALT
- CONCRETE

NOTES

1. EXISTING CONDITIONS AND TOPOGRAPHY DEPICTED HEREON IS AS OBSERVED ON 06/16/2026.
2. THE BOUNDARY SHOWN HEREON IS BASED UPON AN ACTUAL SURVEY ON THE GROUND BY LR GEO AND VERIFIES CONFORMS TO THE BOUNDARY DEPICTED ON RECORD OF SURVEY I.N. 458615 (R4).
3. MINIMUM BUILDING SETBACKS SHALL BE IN ACCORDANCE WITH VALLEY COUNTY APPLICABLE ZONING AND SUBDIVISION REGULATIONS AT THE TIME OF ISSUANCE OF INDIVIDUAL BUILDING PERMITS OR AS SPECIFICALLY APPROVED AND/OR REQUIRED.
4. A TEN (10) FOOT WIDE PUBLIC UTILITY EASEMENT AND PRIVATE IRRIGATION EASEMENT SHALL BE RESERVED ALONG THE SUBDIVISION BOUNDARY, AS SHOWN HEREON.
5. PROPOSED WATER AND SEWER, AS PROVIDED BY CIVIL SITE WORKS, ARE DEPICTED HEREON SCHEMATICALLY FOR PRELIMINARY PLAT PURPOSES ONLY.
6. 35' OF RIGHT-OF-WAY TO BE DEDICATED TO THE HIGHWAY DEPARTMENT.
7. IDAHO POWER HAS A BLANKET ABOVE GROUND EASEMENT OF THE ENTIRE SURVEYED PARCEL AS DESCRIBED IN I.N. 67342.

REFERENCES

D1. WARRANTY DEED I.N. 435630; DECEMBER 2020
R1. ROS I.N. 327595 BY KERR SURVEYING; DECEMBER 2007
R2. ROS I.N. 431548 BY MARKS LAND SURVEYING LLC.; AUGUST 2020
R3. ROS I.N. 443925 BY ACCURATE SURVEYING & MAPPING; SEPTEMBER 2021
R4. ROS I.N. 458615 BY ACCURATE SURVEYING & MAPPING; AUGUST 2023

ABBREVIATIONS

BK	BOOK
C.R.	CORNER RECORD INSTRUMENT NUMBER
COR SEC	CORNER OF SECTION
I.N.	INSTRUMENT NUMBER, VALLEY COUNTY RECORDS
N,E,S,W	NORTH, EAST, SOUTH, WEST
P.U.E.	PUBLIC UTILITY EASEMENT
ROS	RECORD OF SURVEY

ZONING & SETBACK INFORMATION

EXISTING ZONING DESIGNATION:	CC
PROPOSED ZONING DESIGNATION:	CC
MINIMUM LOT SIZE:	122,451 S.F.
SETBACKS:	
FRONT:	5 FEET
REAR:	15 FEET
SIDE:	0 FEET

GENERAL SITE INFORMATION

PROPERTY AREA:	122,451 S.F. (2.811 ACRES)
PROPOSED USE:	STORAGE UNITS
ADDRESS:	450 S. SAMSON TRAIL
LOCATION:	SE ¼ OF THE SE ¼ SECTION 16, T.18N., R.3E.
PARCEL NUMBER (ADA COUNTY):	RP18N03E169755
FEMA FIRM PANEL:	16085C0689 (EFFECTIVE 02/01/2019)
FLOOD DESIGNATION:	ZONE X (AREA OF MINIMAL FLOOD HAZARD)

HORIZONTAL DATUM

NAD 83 (2011) 2010.00, IDAHO SPCS WEST ZONE PROJECTION. SCALED TO MCCALL GROUND GRID, WITH A COMBINED SCALE FACTOR OF 1.00030200 APPLIED ABOUT THE ORIGIN OF THE MCCALL GRID(N 1,190,000, E 2,536,000).

VERTICAL DATUM

NAVD 88, BROUGHT TO THE SITE VIA STATIC OBSERVATION PROCESSED THROUGH THE NGS OPUS UTILITY.

OWNER

ALPINE STORAGE CONDOS, LLC
200 W. 36TH ST, GARDEN CITY, ID 83714
208-724-4543

APPLICANT

HATCH DESIGN ARCHITECTURE
200 W. 36TH ST, BOISE, ID 83714
208-475-3204

SURVEYOR

CHAD LEATHERMAN, PLS
690 S. INDUSTRY WAY, SUITE 55, MERIDIAN, ID, 83642
208-519-5900

LANDSCAPE ARCHITECT

JEFFERY HATCH
200 W. 36TH ST, BOISE, ID 83714
208-475-3204

CIVIL ENGINEER

CORINNE GRAHAM, CIVIL SITE WORKS
PO BOX 6059, BOISE, ID 83707
208-946-3874

AGENCY REVIEW
09-25-2026

CERTIFICATE OF SURVEYOR

I, CHAD LEATHERMAN, DO HEREBY CERTIFY THAT I AM A PROFESSIONAL LAND SURVEYOR, LICENSED BY THE STATE OF IDAHO, AND THAT THIS MAP HAS BEEN PREPARED FROM AN ACTUAL SURVEY MADE ON THE GROUND UNDER MY SUPERVISION, AND THAT THIS MAP IS AN ACCURATE REPRESENTATION OF SAID SURVEY.

PROFESSIONAL LAND SURVEYOR · LICENSED · 19826 · STATE OF IDAHO · CHAD LEATHERMAN

LR Geo
A SURVEYING & MAPPING COMPANY
690 S. INDUSTRY WAY | SUITE 55 | MERIDIAN, IDAHO 83642
208.519.5900 | www.lr-geo.com

LRG PROJ: 26052
DRAFTED BY: JR
CHECKED BY: CL

Owner 1	Owner 2	Owner Address	Owner City	Owner State	Owner Zip		Parcel ID	Property Address	Property Ci	Proper	Property Zip
Gary J Brown	Bette R Brown	2791 S Bay Star Way	Meridian	ID	83642-2096		RP00288001007A	571 Krahn Ln		ID	
Elva Torres		Po Box 2863	McCall	ID		83638	RP00288001016D	No Address Available		ID	
Julie Palmieri Grove		Po Box 983	McCall	ID	83638-0983		RP18N03E169770	380 Krahn Ln	McCall	ID	83638
Jermar LLC Baker Mark N		613 W Valley Pkwy Ste 315	Escondido	CA	92025-2552		RP18N03E169910	440 Krahn Ln	McCall	ID	83638
Rancho De Merlyn LLC		Po Box 1832	McCall	ID	83638-1832		RP18N03E210004	441 Krahn Ln	McCall	ID	83638
Kelly Clark	Anna Clark	Po Box 1832	McCall	ID	83638-1832		RP18N03E210015	441 Krahn Ln	McCall	ID	83638
Flex North LLC		2417 N Heights Dr	Boise	ID	83702-2835		RP18N03E169855	460 Krahn Ln	McCall	ID	83638-5158
William A Burt	Leta I Burt	7348 Bluff Rd	New Plymouth	ID	83655-5013		RP18N03E169940	480 Krahn Ln	McCall	ID	83638
Laura Crawford	David Crawford	Po Box 121	McCall	ID	83638-0121		RP18N03E169075	302 Samson Ct	McCall	ID	83638
Bruce Rude	Katrina Rude	Po Box 1495	McCall	ID	83638-1495		RP18N03E169077	304 Samson Ct	McCall	ID	83638
Nicholas Mortensen	Sharon Mortensen	3045 N Wingate Ln	Meridian	ID	83646-7301		RP18N03E169080	306 Samson Ct	McCall	ID	83638
Susan Ericson		2434 W Cherry Ln	Boise	ID	83705-4311		RP18N03E169230	308 Samson Ct	McCall	ID	83638
Judy W Berheim		Po Box 4043	McCall	ID	83638-8043		RP18N03E169236	310 Samson Ct	McCall	ID	83638-5189
Brett William Spangenberg	Jadwiga Kristina Spangenbei	Po Box 1567	McCall	ID	83638-1567		RP18N03E169100	312 Samson Ct	McCall	ID	83638-5189
Huie Laurence G 2014 Family Trust		7486 Horseshoe Bar Rd	Loomis	CA	95650-9712		RP002880020010	375 S Samson Trl	McCall	ID	83638-5168
BNB MCCALL 36 LLC		16155 N HIGH DESERT ST	Nampa	ID		83687	RP00288001016F	415 S Samson Trl	McCall	ID	83638-5169
Carmello Echanis		845 W Rollins St	Boise	ID	83706-4676		RP18N03E169755	450 S Samson Trl	McCall	ID	83638
Espy Family Revocable Living Trust		Po Box 1245	McCall	ID	83638-1245		RP00288001016B	455 S Samson Trl	McCall	ID	83638
Charles Edward Thielst		54 Rogers Ln	McCall	ID	83638-5013		RP18N03E169870	480 S Samson Trl	McCall	ID	83638-5169
Ernest J Cheney		12741 E Cayley Ave Ste 126	Centennial	CO		80111		400 Krahn Ln			
Jane Gallad	Anthony Gallad	Po Box 1996	McCall	ID		83638	RP00288001011C				

Alpine Storage Condos Neighborhood Meeting

02:41

Chat | People 3 | Raise | React | View | Notes | Apps | More | Camera | Mic | Share | Leave

SR

Syringa Riley



NM

Nick Mortensen

Search

9:57 AM
10/19/2026

Alpine Storage Condos Neighborhood Meeting

01:02:05

Chat | People 2 | Raise | React | View | Notes | Apps | More | Camera | Mic | Share | Leave

Jeffery Hatch

SR

Search

10:57 AM
10/19/2026